Workshop Manual

Golf Variant 2007 ➤
Golf Variant 2010 ➤
Jetta 2005 ➤

General body repairs, interior

Edition 12.2009

Protected by copyright. Copying for private or commercial purposes, in part or in whole, is not permitted unless authorised by Volkswagen AG. Volkswagen AG does not guarantee or accept any liability with respect to the correctness of information in this document. Copyright by Volkswagen AG.

Downloaded from www.Manualslib.com manuals search engine

List of Workshop Manual Repair GroupsList of Workshop Manual Repair GroupsList of Workshop Manual Repair Groups

Repair Group

68 - Interior equipment
69 - Passenger protection
70 - Trim, insulation
72 - Seat frames
74 - Seat - padding, covers

Protected by copyright. Copying for private or commercial purposes, in part or in whole, is not permitted unless authorised by Volkswagen AG. Volkswagen AG does not guarantee or accept any liability with respect to the correctness of information in this document. Copyright © Volkswagen AG.

Technical information should always be available to the foremen and mechanics, because their careful and constant adherence to the instructions is essential to ensure vehicle road-worthiness and safety. In addition, the normal basic safety precautions for working on motor vehicles must, as a matter of course, be observed.

All rights reserved.
No reproduction without prior agreement from publisher.

Copyright © 2010 Volkswagen AG, Wolfsburg

MEX5R005720

Downloaded from www.Manualslib.com manuals search engine

Contents

68 - Interior equipment 1

1 Interior mirror 1
1.1 Tools 1
1.2 Automatic anti-dazzle interior mirror 1
1.3 Removing and installing interior mirror with rain sensor 1
1.4 Bonding on retaining plate for interior mirror with rain sensor 2
1.5 Removing and installing interior mirror in vehicles with adaptive cruise control 3
1.6 Removing and installing interior mirror 5
1.7 Bonding on retaining plate for interior mirror without rain sensor 5

2 Compartments, covers and trims 7
2.1 Tools 7
2.2 Removing and installing basic version centre console (Jetta 2005 ▸, Golf Variant 2007 ▸) 7
2.3 Removing and installing basic version centre console (Jetta 2010 ▸, Golf Variant 2010 ▸) 11
2.4 Removing and installing Highline centre console (Jetta 2005 ▸, Golf Variant 2007 ▸) 16
2.5 Removing and installing Highline centre console (Jetta 2010 ▸, Golf Variant 2010 ▸) 25
2.6 Removing and installing mounting bracket for centre console (Jetta 2005 ▸, Golf Variant 2007 ▸) 35
2.7 Removing and installing mounting bracket for centre console and mounting bracket for footwell trim (Jetta 2010 ▸, Golf Variant 2010 ▸) 36
2.8 Removing and installing cup holder in Highline centre console 37
2.9 Repairing cup holder in centre console, Highline 38
2.10 Removing and installing storage compartment/ashtray (Jetta 2005 ▸, Golf Variant 2007 ▸) 41
2.11 Removing and installing storage compartment/ashtray (Jetta 2010 ▸, Golf Variant 2010 ▸) 42
2.12 Removing and installing dash panel centre vents (vehicles with no Climatronic) (Jetta 2005 ▸, Golf Variant 2007 ▸) 43
2.13 Removing and installing dash panel centre vents (vehicles with Climatronic) (Jetta 2005 ▸, Golf Variant 2007 ▸) 45
2.14 Removing and installing centre storage compartment in dash panel (Jetta 2010 ▸, Golf Variant 2010 ▸) 48
2.15 Removing and installing dash panel centre vents (Jetta 2010 ▸, Golf Variant 2010 ▸) 49
2.16 Removing and installing dash panel middle trim (Jetta 2005 ▸, Golf Variant 2007 ▸) 51
2.17 Removing and installing dash panel middle trim (Jetta 2010 ▸, Golf Variant 2010 ▸) 52
2.18 Removing and installing air conditioner controls unit / heater controls unit trim (Jetta 2010 ▸, Golf Variant 2010 ▸) 53
2.19 Removing and installing dash panel end trims 54
2.20 Removing and installing steering column trim 55
2.21 Removing and installing left trim panel on driver side with no storage compartment 56
2.22 Removing and installing left trim panel on driver side with storage compartment 58
2.23 Removing and installing right trim panel on driver side 60
2.24 Removing and installing glove compartment 62
2.25 Removing and installing glove compartment lock cylinder 66
2.26 Removing and installing footwell cover on driver side 67
2.27 Removing and installing dash panel decorative trims (Jetta 2005 ▸, Golf Variant 2007 ▸) 68
2.28 Removing and installing dash panel decorative trims (Jetta 2010 ▸, Golf Variant 2010 ▸) 69
2.29 Removing and installing centre cover (Jetta 2005 ▸, Golf Variant 2007 ▸) 72
2.30 Removing and installing centre cover (Jetta 2010 ▸, Golf Variant 2010 ▸) 72
2.31 Removing and installing sun visor 73

3 Sill panel mouldings 77
3.1 Removing and installing sill panel mouldings 77

Protected by copyright. Copying for private or commercial purposes, in part or in whole, is not permitted unless authorised by Volkswagen AG. Volkswagen AG does not guarantee or accept any liability with respect to the correctness of information in this document.

Downloaded from www.Manualslib.com manuals search engine

3.2 Removing and installing wheel housing liner (saloon) . . . 78
3.3 Removing and installing wheel housing liner (Variant) . . . 79

4 Grab handles . . . 81
4.1 Removing and installing roof grab handles . . . 81
4.2 Removing and installing roof grab handle bracket . . . 82

5 Net partition . . . 84
5.1 Removing and installing net partition . . . 84
5.2 Removing and installing net partition mountings . . . 85
5.3 Removing and installing net partition bracket on vehicles with no panorama sliding roof . . . 86
5.4 Removing and installing net partition bracket on vehicles with panorama sliding roof . . . 87

69 - Passenger protection . . . 88

1 Seat belts . . . 88
1.1 General safety regulations when working on airbag, belt tensioner and battery isolator units (pyrotechnic components) . . . 89
1.2 Special instructions for belt tensioners . . . 90
1.3 Storage, transportation and disposal of airbag, belt tensioner and battery isolator units (pyrotechnic components) . . . 90
1.4 Assembly overview - front seat belts . . . 91
1.5 Removing and installing front seat belts . . . 91
1.6 Removing and installing front belt height adjuster . . . 93
1.7 Removing and installing front belt buckle . . . 94
1.8 Assembly overview - rear outer seat belts (saloon) . . . 96
1.9 Removing and installing rear outer seat belts (saloon) . . . 96
1.10 Assembly overview - rear outer seat belts (Variant) . . . 98
1.11 Removing and installing rear outer seat belts (Variant) . . . 98
1.12 Assembly overview - rear centre 3-point seat belt . . . 100
1.13 Removing and installing rear centre 3-point seat belt . . . 100
1.14 Removing and installing middle rear seat lap belt . . . 101
1.15 Removing and installing rear double belt buckle . . . 102

2 Inspecting seat belts . . . 104
2.1 Points to check . . . 104

3 Checking child seat anchors (ISOFIX) after an accident . . . 108
3.1 Points to check . . . 108
3.2 Removing and installing child seat anchorages in rear shelf . . . 108

4 Airbag . . . 109
4.1 Overview of locations - airbag systems . . . 109
4.2 General safety regulations when working on airbag, belt tensioner and battery isolator units (pyrotechnic components) . . . 111
4.3 Special instructions for driver and front passenger airbag . . . 112
4.4 Special instructions for curtain airbag modules . . . 112
4.5 Storage, transportation and disposal of airbag, belt tensioner and battery isolator units (pyrotechnic components) . . . 112
4.6 Deactivating the airbag . . . 112
4.7 Renewing airbag units following an accident . . . 113
4.8 Removing and installing airbag control unit J234 . . . 114
4.9 Removing and installing airbag unit on driver side (Jetta 2005 ▸, Golf Variant 2007 ▸) . . . 116
4.10 Removing and installing airbag unit on driver side (Jetta 2010 ▸, Golf Variant 2010 ▸) . . . 120
4.11 Removing and installing airbag coil connector and return spring with slip ring F138 . . . 123
4.12 Removing and installing key operated switch to deactivate front passenger airbag E224 . . . 123
4.13 Removing and installing knee airbag (Jetta 2010 ▸, Golf Variant 2010 ▸) . . . 124
4.14 Removing and installing knee airbag bracket (Jetta 2010 ▸, Golf Variant 2010 ▸), left-hand drive vehicles . . . 126
4.15 Removing and installing knee airbag bracket (Jetta 2010 ▸, Golf Variant 2010 ▸), right-hand drive vehicles . . . 128

Downloaded from www.Manualslib.com manuals search engine

4.16 Removing and installing return spring with slip ring . . . 130
4.17 Removing and installing front passenger airbag unit . . . 130
4.18 Removing and installing side airbags on driver and front passenger sides . . . 135
4.19 Removing and installing rear side-airbag . . . 136
4.20 Removing and installing curtain airbag on driver and passenger side (saloon) . . . 138
4.21 Removing and installing curtain airbag on driver and passenger side (Variant) . . . 140
4.22 Removing and installing seat occupied sensor, front passenger side G128 . . . 142
4.23 Adapting components . . . 147

5 Seat occupied recognition (USA) . . . 148
5.1 Safety precautions for when working on seat occupied recognition . . . 148
5.2 Procedure for seat belt tensioner after an accident and /or triggering of airbag . . . 148
5.3 Assembly overview - seat occupied recognition (USA) . . . 149
5.4 Parts repair kit for seat occupied recognition . . . 149
5.5 Removing and installing repair kit for seat occupied recognition on vehicles with manually adjusted seats . . . 150
5.6 Removing and installing repair kit for seat occupied recognition on vehicles with electrically adjusted seats . . . 159
5.7 Importers reporting obligation . . . 168

6 Crash sensors . . . 170
6.1 Tools . . . 170
6.2 Removing and installing crash sensors in front doors (Jetta 2005 ▸, Golf Variant 2007 ▸) . . . 170
6.3 Removing and installing side airbag crash sensor on driver side G179 (Jetta 2010 ▸, Golf Variant 2010 ▸) . . . 173
6.4 Removing and installing side airbag crash sensor on front passenger side G180 (Jetta 2010 ▸, Golf Variant 2010 ▸) . . . 175
6.5 Removing and installing crash sensors in rear wheel housing (saloon) . . . 175
6.6 Removing and installing crash sensors in rear wheel housing (Variant) . . . 177

70 - Trim, insulation . . . 179

1 Dash panel . . . 179
1.1 Tools . . . 179
1.2 Removing and installing dash panel . . . 179
1.3 Removing and installing dash panel cross member (right-hand drive vehicles) . . . 186
1.4 Removing and installing dash panel cross member (left-hand drive vehicles) . . . 192
1.5 Aligning dash panel in vehicle (Jetta 2005 ▸, Golf Variant 2007 ▸) . . . 196

2 Door trims . . . 201
2.1 Tools . . . 201
2.2 Removing and installing front door trim on driver side . . . 201
2.3 Removing and installing front door trim on passenger side . . . 203
2.4 Removing and installing trim strip in door trim . . . 204
2.5 Removing and installing rear door trim . . . 205
2.6 Removing and installing window crank . . . 207

3 Pillar and side trims . . . 209
3.1 Removing and installing upper trim for A-pillar . . . 209
3.2 Removing and installing middle trim for A-pillar . . . 210
3.3 Removing and installing lower trim for A-pillar trim on driver side . . . 211
3.4 Removing and installing lower trim for A-pillar trim on front passenger side . . . 212
3.5 Removing and installing upper B-pillar trim . . . 213
3.6 Removing and installing lower trim for B-pillar . . . 215
3.7 Removing and installing C-pillar trim (saloon) . . . 217
3.8 Removing and installing C-pillar trim (Variant) . . . 218
3.9 Removing and installing D-pillar trim . . . 219
3.10 Removing and installing rear shelf . . . 221

4 Luggage compartment trims . . . 223
4.1 Tools . . . 223

Copyright by Volkswagen AG. Volkswagen AG does not guarantee or accept any liability with respect to the correctness of information in this document. Copyright by Volkswagen AG. Volkswagen AG does not guarantee or accept any liability with respect to the correctness of information in this document. Copyright by Volkswagen AG.

Downloaded from www.Manualslib.com manuals search engine

4.2 Removing and installing floor covering from vehicle with flat luggage compartment (Variant) . . . 223
4.3 Removing and installing storage compartment cover in vehicle with flat floor (Variant) 224
4.4 Removing and installing luggage compartment trim in vehicle with flat floor (Variant) . . . 225
4.5 Removing and installing felt covering in vehicle with flat floor (Variant) . . . 226
4.6 Removing and installing rear lock carrier cover (saloon) . . . 227
4.7 Removing and installing rear lock carrier cover (Variant) . . . 228
4.8 Removing and installing luggage compartment side trim (saloon) . . . 230
4.9 Removing and installing luggage compartment side trim (Variant) . . . 231
5 Rear lid trim . . . 234
5.1 Tools . . . 234
5.2 Removing and installing lower trim for rear lid (saloon) . . . 234
5.3 Removing and installing lower trim for rear lid (Variant) . . . 235
5.4 Removing and installing window frame trim (Variant) . . . 236
6 Roof trims . . . 238
6.1 Tools . . . 238
6.2 Removing and installing roof end strip (saloon) . . . 238
6.3 Removing and installing roof end strip (Variant) . . . 240
6.4 Removing and installing moulded headliner (saloon) . . . 241
6.5 Removing and installing moulded headliner (Variant) . . . 245
6.6 Removing and installing roof insulation/reinforcement (Variant) . . . 247

72 - Seat frames . . . 250
1 Front seats . . . 250
1.1 Tools . . . 250
1.2 Removing and installing front seat . . . 251
1.3 Removing and installing left and right trim on seat . . . 255
1.4 Removing and installing left and right trim on folding front passenger seat . . . 258
1.5 Removing and installing right trim on seat with electrically adjustable backrest (USA) . . . 260
1.6 Removing and installing left trim on electrically operated seat . . . 261
1.7 Removing and installing lumbar adjustment lever (Jetta 2010 ▸, Golf Variant 2010 ▸) . . . 262
1.8 Removing and installing seat drawer mounting . . . 263
1.9 Removing and installing front seat bar and operating lever . . . 265
1.10 Removing and installing bar and operating lever on seat with electrically adjustable backrest (USA) . . . 266
1.11 Removing and installing bar and operating lever on electrically adjustable seat . . . 267
1.12 Removing and installing head restraint guides . . . 268
1.13 Removing and installing front seat backrest . . . 268
1.14 Removing and installing manually adjustable lumbar support frame (Jetta 2005 ▸, Golf Variant 2007 ▸) . . . 270
1.15 Removing and installing manually adjustable lumbar support frame (Jetta 2010 ▸, Golf Variant 2010 ▸) . . . 272
1.16 Removing and installing backrest release Bowden cable on front passenger seat with folding backrest . . . 273
1.17 Removing and installing electric longitudinal seat adjustment . . . 274
1.18 Removing and installing seat pan on electrically adjustable seat . . . 275
1.19 Removing and installing rake adjustment on electrically adjustable seat . . . 278
1.20 Removing and installing height adjustment on electrically adjustable seat . . . 279
1.21 Removing and installing lumbar support on electrically adjustable seat . . . 281
1.22 Removing and installing drive for (electric) backrest adjustment . . . 283
2 Rear seats . . . 284
2.1 Removing and installing bench seat (saloon) . . . 284
2.2 Removing and installing bench seat (Variant) . . . 284
2.3 Removing and installing backrest . . . 285
2.4 Removing and installing side padding with side airbag . . . 287
2.5 Removing and installing side padding with no side-airbag . . . 288

Protected by copyright. Copying for private or commercial purposes, in part or in whole, is not permitted unless authorised by Volkswagen AG. Volkswagen AG does not guarantee or accept any liability with respect to the correctness of information in this document. Copyright by Volkswagen AG.

Downloaded from www.Manualslib.com manuals search engine

74 - Seat - padding, covers 290

1 Front seat covers and padding 290
1.1 Tools 290
1.2 Removing and installing front seat cushion cover and padding 291
1.3 Removing and installing front seat backrest cover and padding 294

2 Rear seat covers and padding 298
2.1 Tools 298
2.2 Removing and installing bench seat cover and padding (saloon) 298
2.3 Removing and installing bench seat cover and padding (Variant) 300
2.4 Removing and installing backrest cover and padding (saloon) 302
2.5 Removing and installing backrest cover and padding (Variant) 305
2.6 Removing and installing through-loading unit with centre armrest 308
2.7 Adjusting through-loading unit with centre armrest 309
2.8 Removing and installing centre armrest 311

Protected by copyright. Copying for private or commercial purposes, in part or in whole, is not permitted unless authorised by Volkswagen AG. Volkswagen AG does not guarantee or accept any liability with respect to the correctness of information in this document. Copyright by Volkswagen AG.

Downloaded from www.Manualslib.com manuals search engine

Protected by copyright. Copying for private or commercial purposes, in part or in whole, is not permitted unless authorised by Volkswagen AG. Volkswagen AG does not guarantee or accept any liability with respect to the correctness of information in this document. Copyright by Volkswagen AG.

Downloaded from www.Manualslib.com manuals search engine

68 – Interior equipment

1 Interior mirror

1.1 Tools

1.1.1 Required special tools, workshop equipment, test and measuring devices and auxiliary items

♦ Removal wedge -3409-

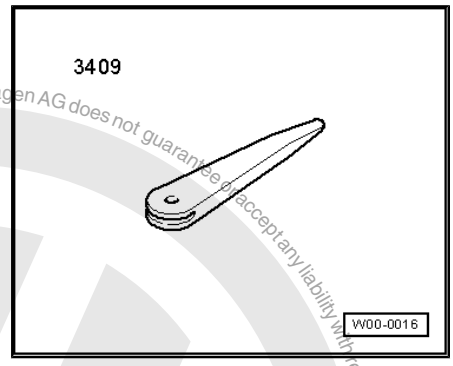

1.2 Automatic anti-dazzle interior mirror

The automatic anti-dazzle interior mirror darkens continuously when the driver is dazzled from behind.

It consists of a mirror element and electrics with two photosensors.

The photosensors of the electronics detect the light incidence from the front and the rear.

If the light incidence is greater from the rear than from the front, the electronics apply voltage to the conductive coating.

The applied voltage changes the colour of the electrolyte. The greater the voltage, the darker the electrolyte. Therefore, the incident light is reflected to a lesser degree.

Selecting reverse gear switches off the anti-dazzle function. Consequently, one can, for example, reverse out of a dark garage with the aid of the interior mirror.

1.3 Removing and installing interior mirror with rain sensor

1.3.1 Removing

– Switch off ignition.

– Using removal wedge -3409- , release fastener -1- of right cover cap -2-.

– Release left -3- and right cover caps -2- from mirror base.

– Disconnect connector -4-.

Protected by copyright. Copying for private or commercial purposes in part or in whole, is not permitted unless authorised by Volkswagen AG. Volkswagen AG does not guarantee or accept any liability with respect to the correctness of information in this document. Copyright by Volkswagen AG.

Downloaded from www.Manualslib.com manuals search engine

– Slide interior mirror along windscreen and then downwards out of mounting.

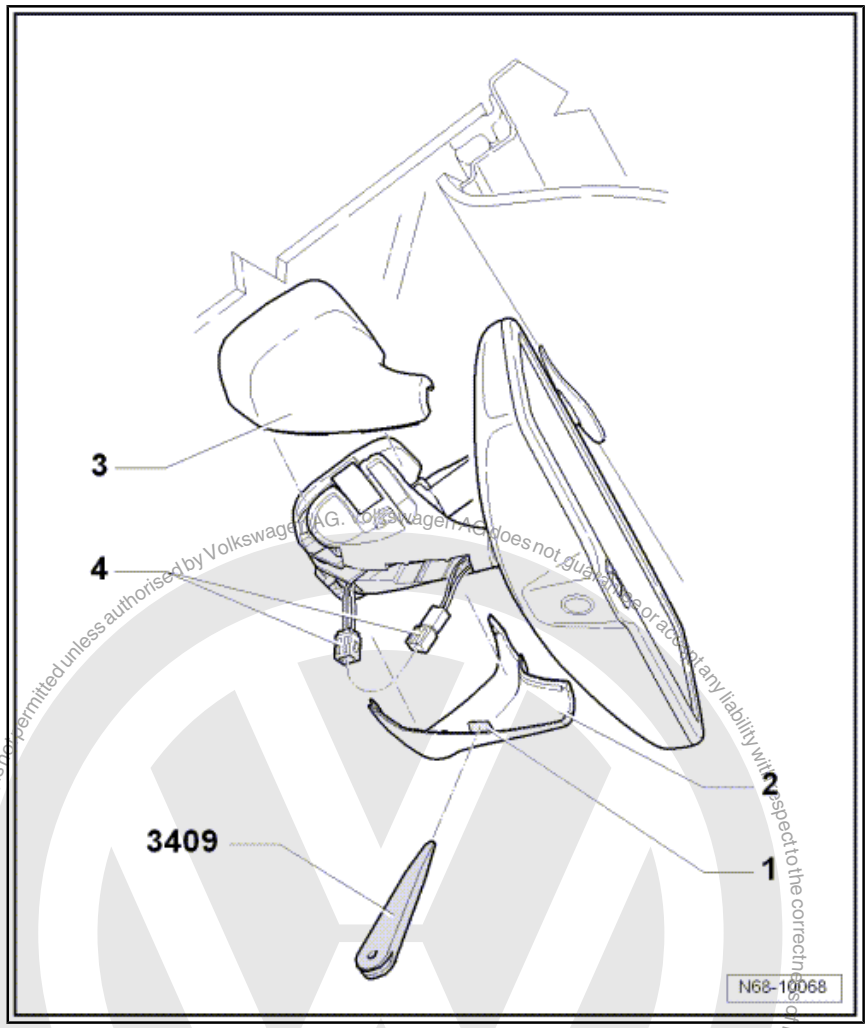

1.3.2 Installing

– Install in reverse order of removal.

1.4 Bonding on retaining plate for interior mirror with rain sensor

The following repair procedure avoids the old procedure, renewing the windscreen.

At the same time, it is also possible to reuse the old mirror base which has fallen off.

1.4.1 Preparing windscreen

– All adhesive and primer residue must be removed from the ceramic pre-coating.

– Clean bonding area with cleaning solution -D 009 401 04- .

– Adhere to flash-off period of at least 10 minutes.

– Apply glass primer/paint primer -D 009 200 02- .

Downloaded from www.Manualslib.com manuals search engine

– Flash-off period up to bonding: minimum of 10 minutes to maximum of 1 hour.

1.4.2 Preparing detached or new mirror base

– Mechanically remove adhesive remains (applies only for a mirror base which has become detached).

– Prepare adhesive surface by sanding down with wet fine emery paper (800-1200 grade) until water does not run off surface to be bonded.

– Then clean with cleaning solution -D 009 401 04- .

1.4.3 Bonding mirror base

– Apply 2K polyurethane adhesive -D 180 KD2 A1- directly to sanded and cleaned mirror base bonding surface.

– Adhesive bead diameter: approx. 2.5…3 mm.

– Press mirror base into position on prepared windscreen immediately after applying adhesive to base.

– Align mirror base in position on ceramic pre-coat surface and secure with adhesive tape.

1.4.4 Cleaning and removing excessive adhesive

– Carefully remove adhesive tape after 0.5…1 hour after attaching mirror base.

– Remove excessive and still soft adhesive from around mirror base using a spatula.

– Then remove remaining excessive adhesive completely using a cloth or primer applicator soaked in cleaning solution.

1.4.5 Installing rain sensor and mirror

– Mirror can be fitted 2.5 hours after attaching mirror base.

1.5 Removing and installing interior mirror in vehicles with adaptive cruise control

Removing

– Switch off ignition.

– Carefully push interior mirror -1- in direction of -arrow- and out of retaining plate.

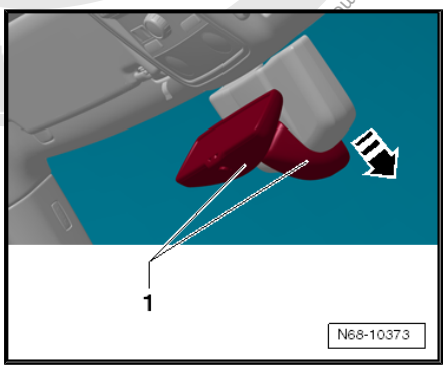

Protected by copyright. Copying for private or commercial purposes, in part or in whole, is not permitted unless authorised by Volkswagen AG. Volkswagen AG does not guarantee or accept any liability with respect to the correctness of information in this document.

Downloaded from www.Manualslib.com manuals search engine

– Press locking tabs -1- and -2- outwards and remove cap -3- from mirror.

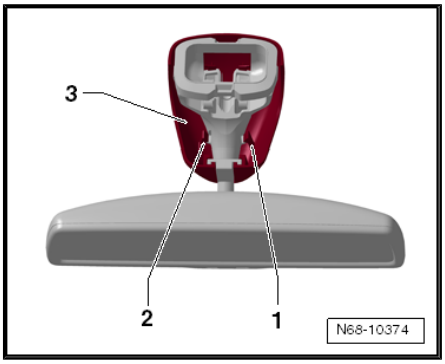

– Disconnect connector -1-.

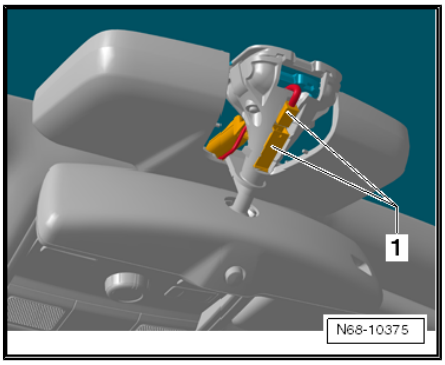

– Release cap -1- from fasteners along sides -arrows- and remove.

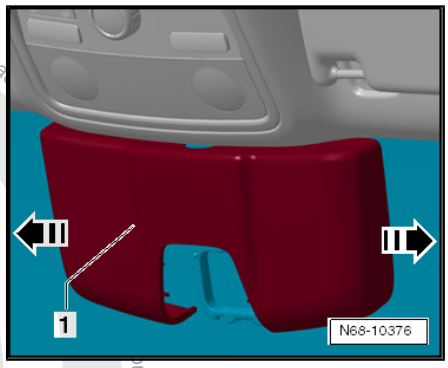

Installing

– Install in reverse order of removal.

Protected by copyright. Copyright for private or commercial purposes, in part or in whole, is not permitted unless authorised by Volkswagen AG. Volkswagen AG does not guarantee or accept any liability with respect to the correctness of information in this document. Copyright by Volkswagen AG.

Downloaded from www.Manualslib.com manuals search engine

1.6 Removing and installing interior mirror

1.6.1 Removing

– Turn interior mirror -1- anti-clockwise through 90° -arrow- and release it from adhesive plate -2-.

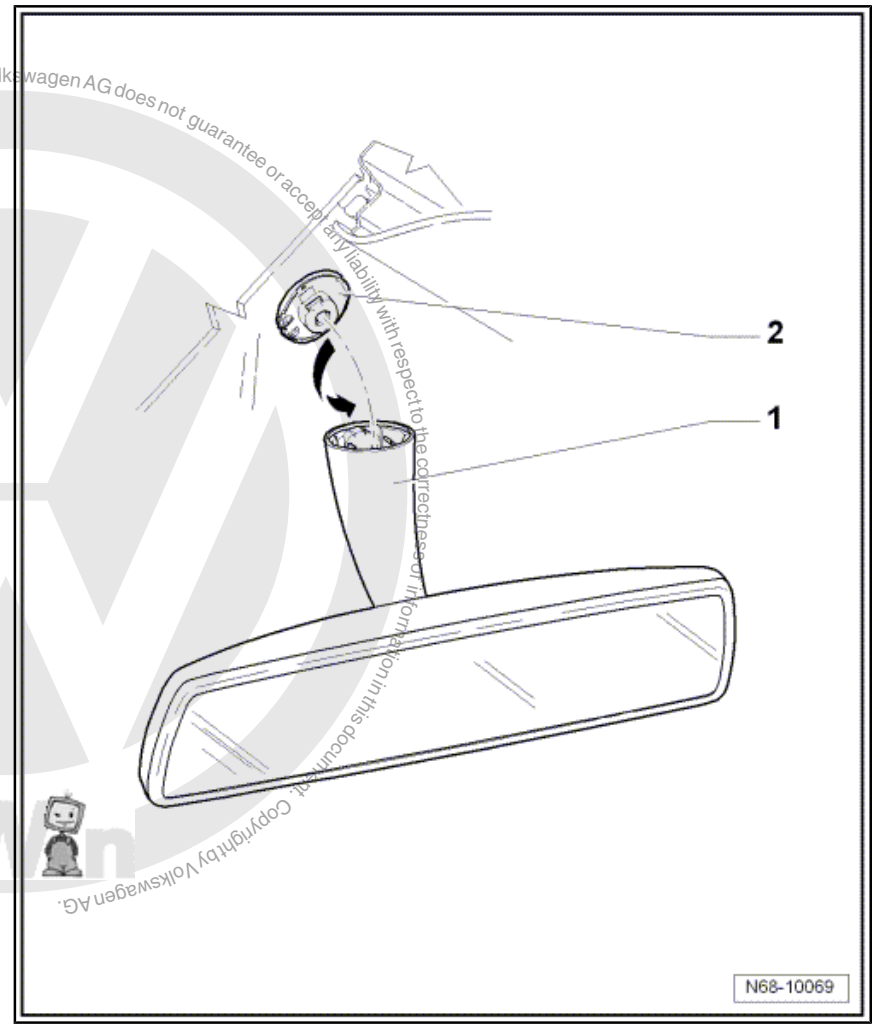

Protected by copyright. Copying for private or commercial purposes, in part or in whole, is not permitted unless authorised by Volkswagen AG. Volkswagen AG does not guarantee or accept any liability with respect to the correctness of information in this document. Copyright by Volkswagen AG.

1.6.2 Installing

– Install in reverse order of removal.

1.7 Bonding on retaining plate for interior mirror without rain sensor

1.7.1 Materials:

♦ Glass-metal adhesive kit “D 000 703 A1”

Downloaded from www.Manualslib.com manuals search engine

1.7.2 Tools:

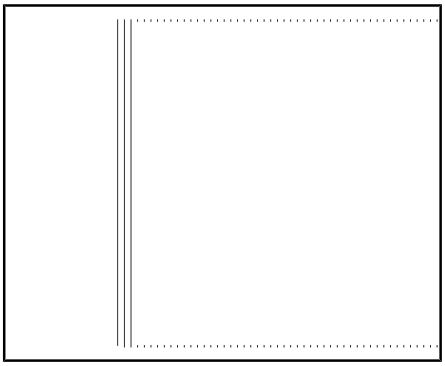

1 - Glass scraper (commercially available)

2 - Blade (commercially available)

– Remove retaining plate from mirror base.

– Remove PUR adhesive from mirror base using a wire brush.

– Grind off the three spacer protrusions on bonding surface. To do this, use sandpaper (360/400 grain) laid on flat surface.

– Keep sanded surface clean and free of grease.

– Remove PUR adhesive material and primer down to ceramic layer on windscreen using glass scraper.

– Clean bonding area with adhesive remover -D 002 000 10- or cleaning solution -D 009 401 04- .

Caution

Do not damage ceramic coating. Scratches will remain permanently visible.

– Cut nylon mesh fabric exactly to size of mirror base.

Note

Wear hand protection (rubber gloves).

– Apply adhesive evenly and smoothly to base of mirror.

– Lay nylon mesh fabric on base of mirror.

– Apply further adhesive to nylon mesh fabric by dabbing with tube.

Only 30 seconds is available from laying nylon mesh fabric on adhesive to pressing base onto windscreen.

– Press base of mirror firmly (do not use force) against windscreen for 15 seconds.

– Remove excess adhesive with a cloth.

Note

Interior mirror can be installed after 15 minutes.

Protected by copyright. Copying for private or commercial purposes, in part or in whole, is not permitted unless authorised by Volkswagen AG. Volkswagen AG does not guarantee or accept any liability with respect to the correctness of information in this document. Copyright by Volkswagen AG.

Downloaded from www.Manualslib.com manuals search engine

2 Compartments, covers and trims

2.1 Tools

2.1.1 Required special tools, workshop equipment, test and measuring devices and auxiliary items

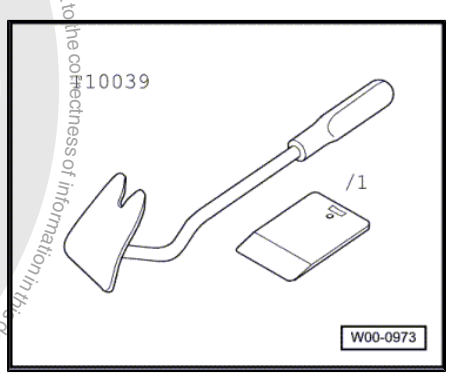

- Release lever -T10039 -
- Removal wedge -3409-

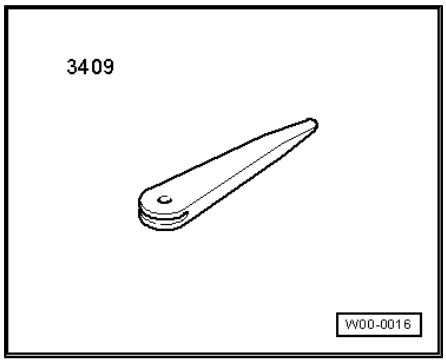

2.2 Removing and installing basic version centre console (Jetta 2005 ▸, Golf Variant 2007 ▸)

2.2.1 Removing

Vehicles with automatic gearbox

– Move selector lever to position “N”.

– Release selector lever cover along with handle from cover ⇒ 6-speed automatic gearbox 09G; Rep. Gr. 37 ; Selector mechanism .

Vehicles with manual gearbox

– Release boot along with gearstick knob from cover ⇒ Rep. Gr. 34 ; Repairing selector mechanism .

Vehicles with dual clutch gearbox

– Move selector lever to position “N”.

– Release selector lever cover along with handle from cover ⇒ Dual clutch gearbox 02E; Rep. Gr. 34 ; Selector mechanism .

Protected by copyright. Copying for private or commercial purposes, in part or in whole, is not permitted unless authorised by Volkswagen AG. Volkswagen AG does not guarantee or accept any liability with respect to the correctness of information in this document. Copyright by Volkswagen AG.

Downloaded from www.Manualslib.com manuals search engine

All vehicles

- Switch off ignition.
- Remove hand brake lever trim ⇒ Brake system; Rep. Gr. 46 ; Assembly overview - hand brake lever .
- Remove the two trim lining mats -1- from the extension -3-.
- Remove the three bolts -2- (1.5 Nm).
- Release extension -3- from fasteners.
- Pull extension -3- forwards through opening for handbrake lever.

Protected by copyright. Copying for private or commercial purposes, in part or in whole, is not permitted unless authorised by Volkswagen AG. Volkswagen AG does not guarantee or accept any liability with respect to the correctness of this document.

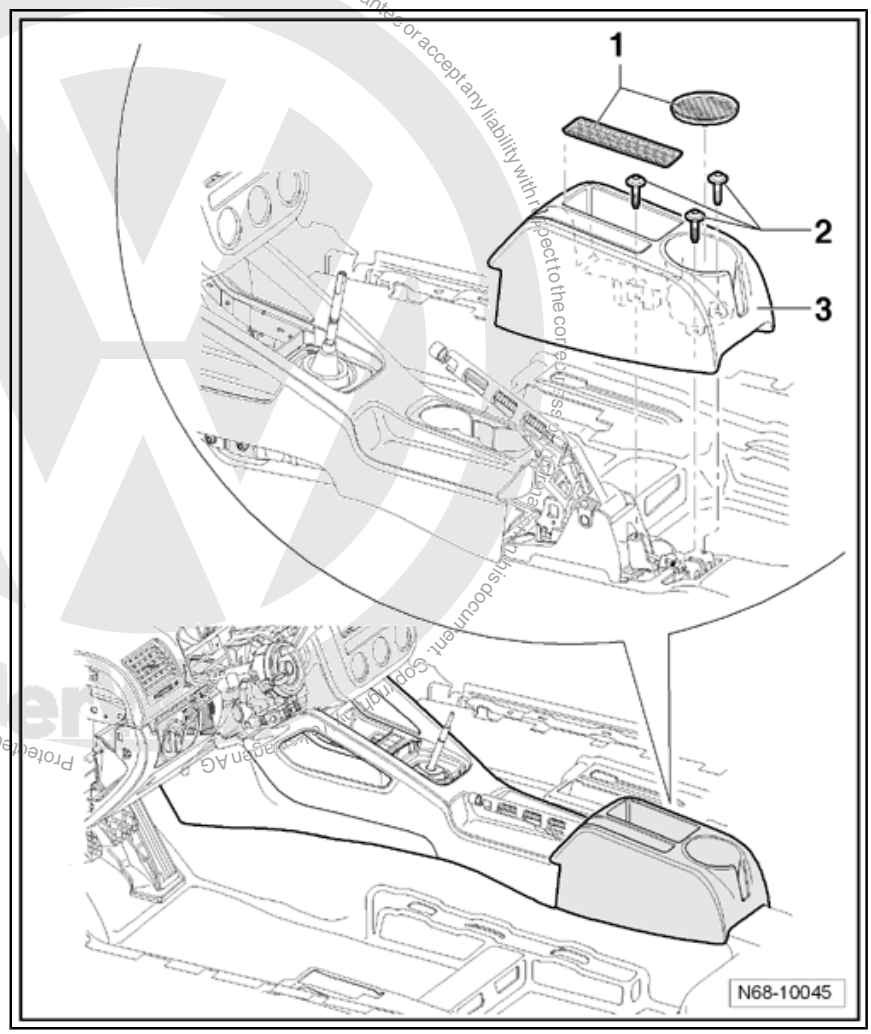

- Release selector insulation -1- from centre console.
- Remove the two bolts -2- (1.5 Nm).
- Release storage compartment -3- from centre console and disconnect wiring harnesses (dependent on vehicle equipment).

Downloaded from www.Manualslib.com manuals search engine

Note

An ashtray may be installed instead of a storage compartment -3-, but the removal is identical.

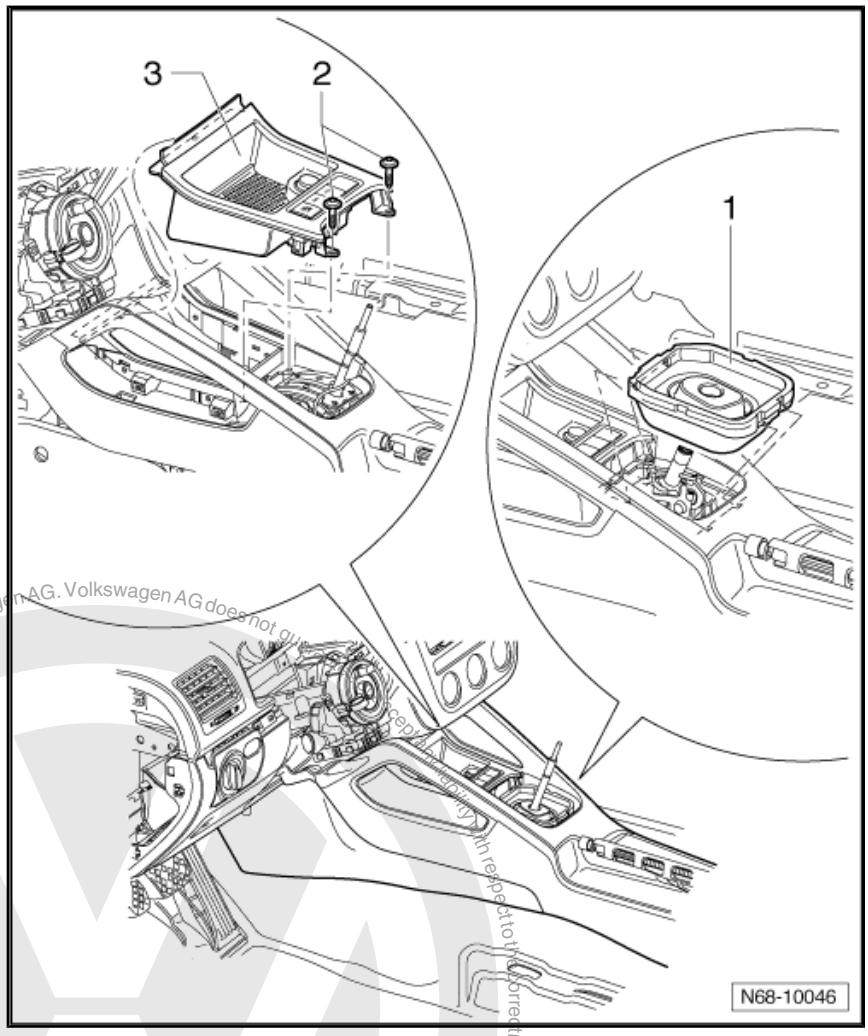

– Unclip cover -1- from trim using a small screwdriver.
– Remove bolt -2- (1.5 Nm).
– Pull left footwell trim -3- out of fasteners.

Note

Removal of right footwell trim is identical.

– Unclip both side trims -4- from centre console by releasing fasteners with a removal wedge -3409- .

Protected by copyright. Copying for private or commercial purposes, in part or in whole, is not permitted unless authorised by Volkswagen AG. Volkswagen AG does not guarantee or accept any liability with respect to the correctness of information in this document. Copyright by Volkswagen AG.

Downloaded from www.Manualslib.com manuals search engine

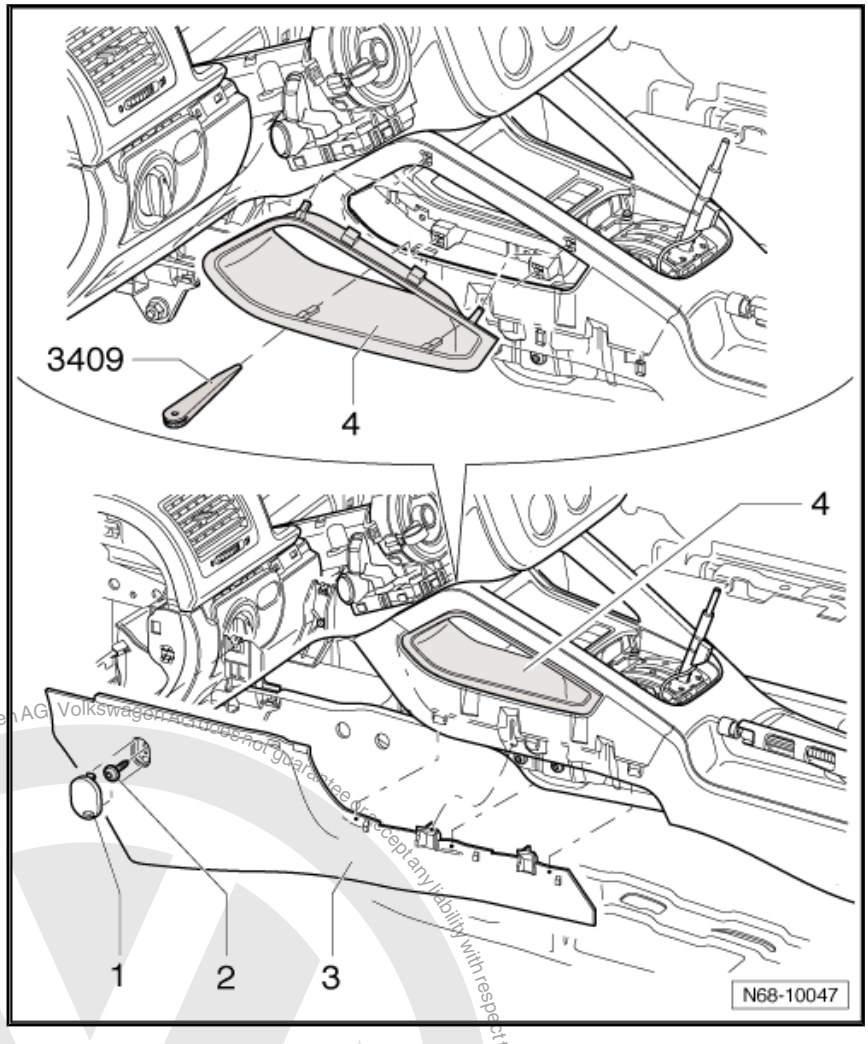

– Remove two bolts each -1- and -2- (1.5 Nm).
– Remove two bolts each -3- and -4- (1.5 Nm).
– Remove lining mat from rear cup holder and remove bolt -5- (1.5 Nm).

Note

When installing, bolts must be installed in sequence -1-, -2-, -3-, -4- and -5-.

– Remove centre console from vehicle.

Protected by copyright. Copying for private or commercial purposes, in part or in whole, is not permitted unless authorised by Volkswagen AG. Volkswagen AG does not guarantee or accept any liability with respect to the correctness of information in this document. Copyright by Volkswagen AG.

Downloaded from www.Manualslib.com manuals search engine

Protected by copyright. Copying for private or commercial purposes, in part or in whole, is not permitted unless authorised by Volkswagen AG. Volkswagen AG does not guarantee or accept any liability with respect to the correctness of information. Copyright by Volkswagen AG.

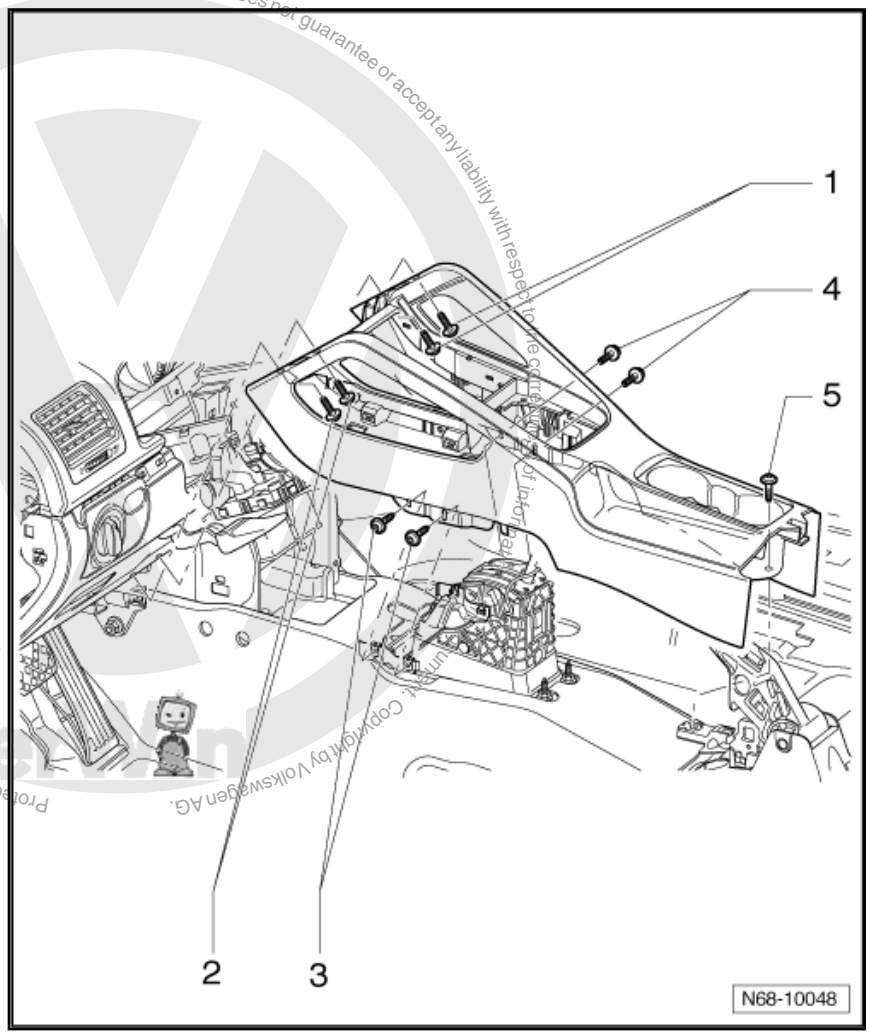

2.2.2 Installing

– Install in reverse order of removal.

2.3 Removing and installing basic version centre console (Jetta 2010 ▸, Golf Variant 2010 ▸)

2.3.1 Removing

– Switch off ignition.

Vehicles with automatic gearbox

– Release selector lever boot from cover ⇒ Rep. Gr. 37 .

Vehicles with manual or dual clutch gearbox

– Release selector lever boot from cover ⇒ Rep. Gr. 34 .

All vehicles

– Remove handbrake lever trim ⇒ Rep. Gr. 46 .

– Remove dash panel middle trim (Jetta 2010 ▸, Golf Variant 2010 ▸) ⇒ page 52 .

Downloaded from www.Manualslib.com manuals search engine

– Remove air conditioner controls unit / heater controls unit trim (Jetta 2010 ▸, Golf Variant 2010 ▸) ⇒ page 53 .

– Remove centre cover (Jetta 2010 ▸, Golf Variant 2010 ▸) ⇒ page 72 .

– Remove the two trim lining mats -2- from the extension -4-.

– Remove lining mat -5- from centre console.

– If fitted, remove “AUX IN socket” -1- ⇒ Communication; Rep. Gr. 91 ; Removing and installing connection for external audio sources -R199- .

– Remove the three bolts -3- (1.5 Nm).

– Release extension from mountings.

– Pull extension forwards through opening for handbrake lever.

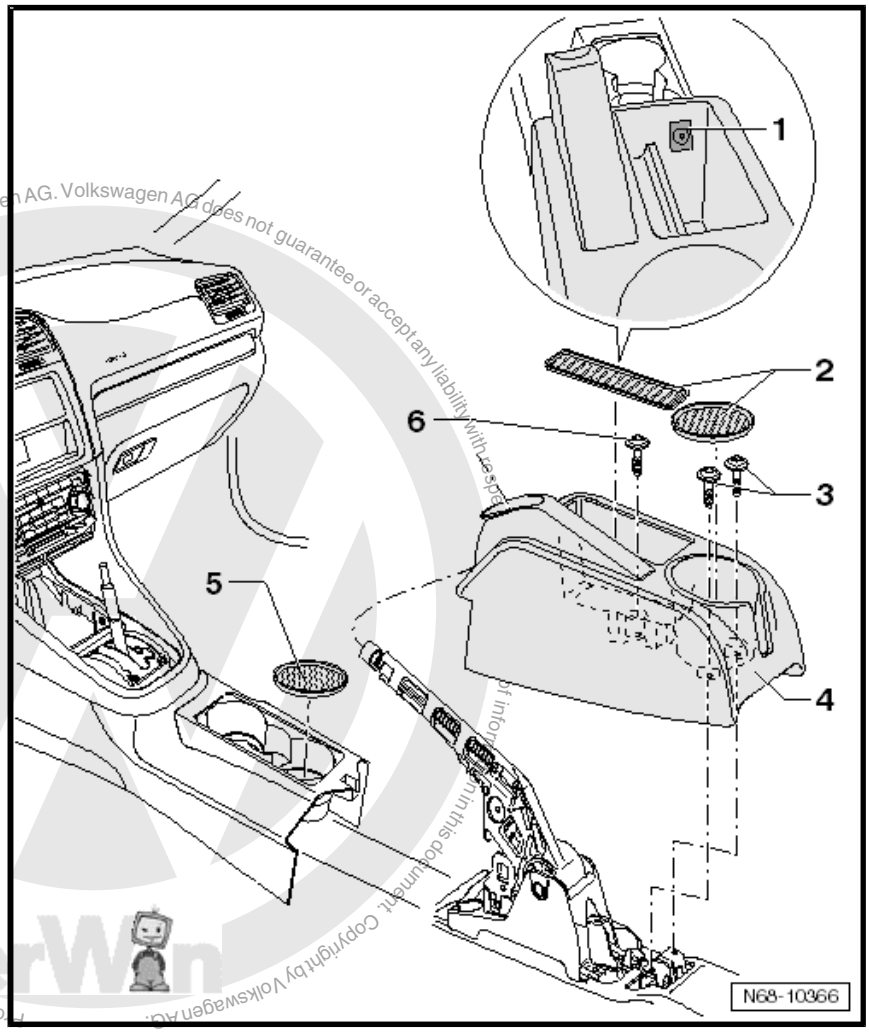

Protected by copyright. Copying for private or commercial purposes, in part or in whole, is not permitted unless authorised by Volkswagen AG. Volkswagen AG does not guarantee or accept any liability with respect to the correctness of information in this document. Copyright by Volkswagen AG.

– Release gearstick insulation -3- from centre console (only vehicles with a gearstick).

– Remove the two bolts -2- (1.5 Nm).

– Release ashtray unit -1- from centre console and disconnect wiring harness (dependent on vehicle equipment).

Downloaded from www.Manualslib.com manuals search engine

Copying for private or commercial purposes, in part or in whole, is not permitted unless authorised by Volkswagen AG. Volkswagen AG does not guarantee or accept any liability with respect to the correctness of information in this document.

Note

A storage compartment may be installed instead of an ashtray -1-, but the removal is identical.

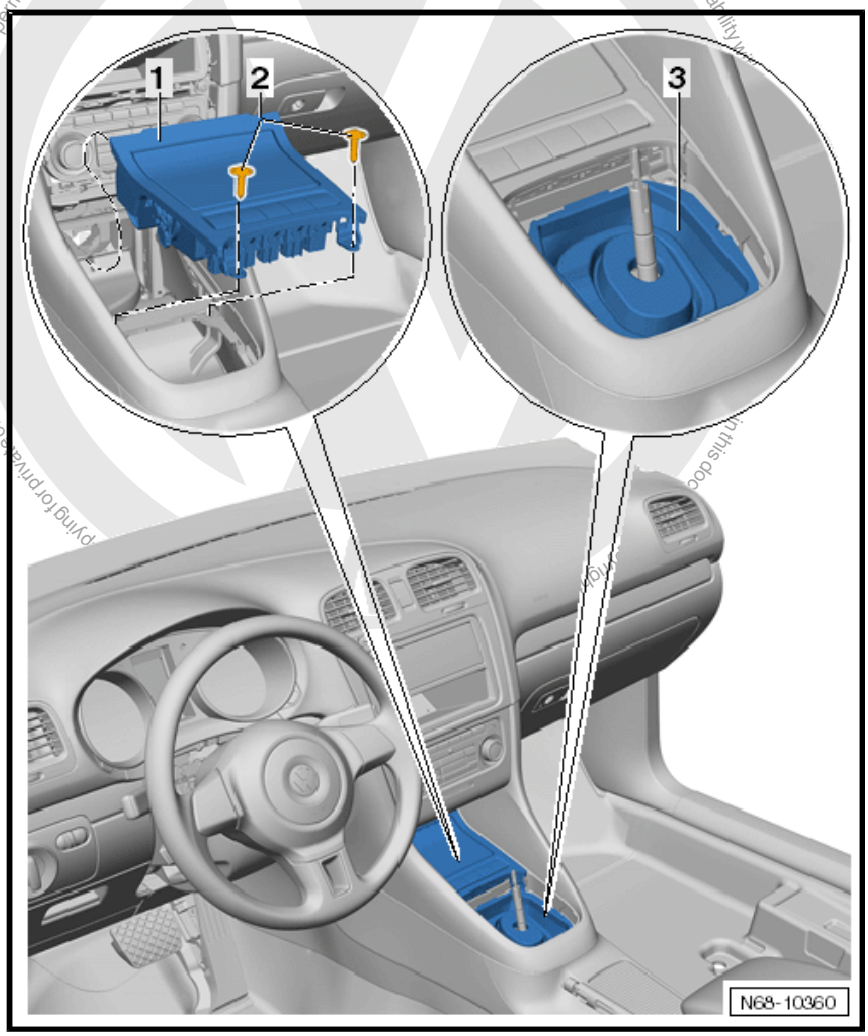

– Remove bolt -1- (1.5 Nm).
– Pull left footwell trim -2- out of mountings.

Note

- *Removal of right footwell trim is identical.*
- *When installing, first insert footwell trim -2- into mounting -3-.*

Downloaded from www.Manualslib.com manuals search engine

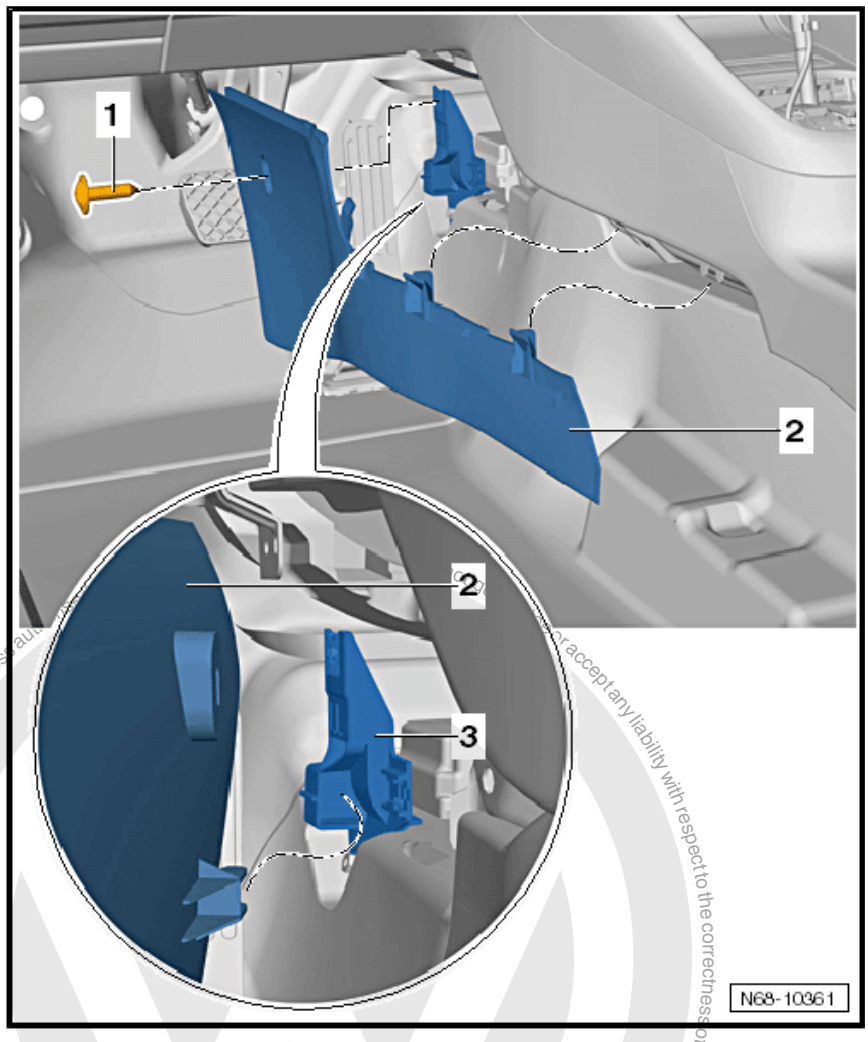

- Remove the two bolts -4- (1.5 Nm).
- Remove bolt -3- (1.5 Nm).
- Remove the two bolts -2- (1.5 Nm).
- Pull centre console cover -1- out in direction of -arrow-.

Note

When installing, bolts must be fitted in sequence -2-, -3- and -4-.

Protected by copyright. Copyright by Volkswagen AG. Copying for private or commercial purposes, in part or in whole, is not permitted unless authorised. Volkswagen AG does not guarantee or accept any liability with respect to the correctness of information in this document.

Downloaded from www.Manualslib.com manuals search engine

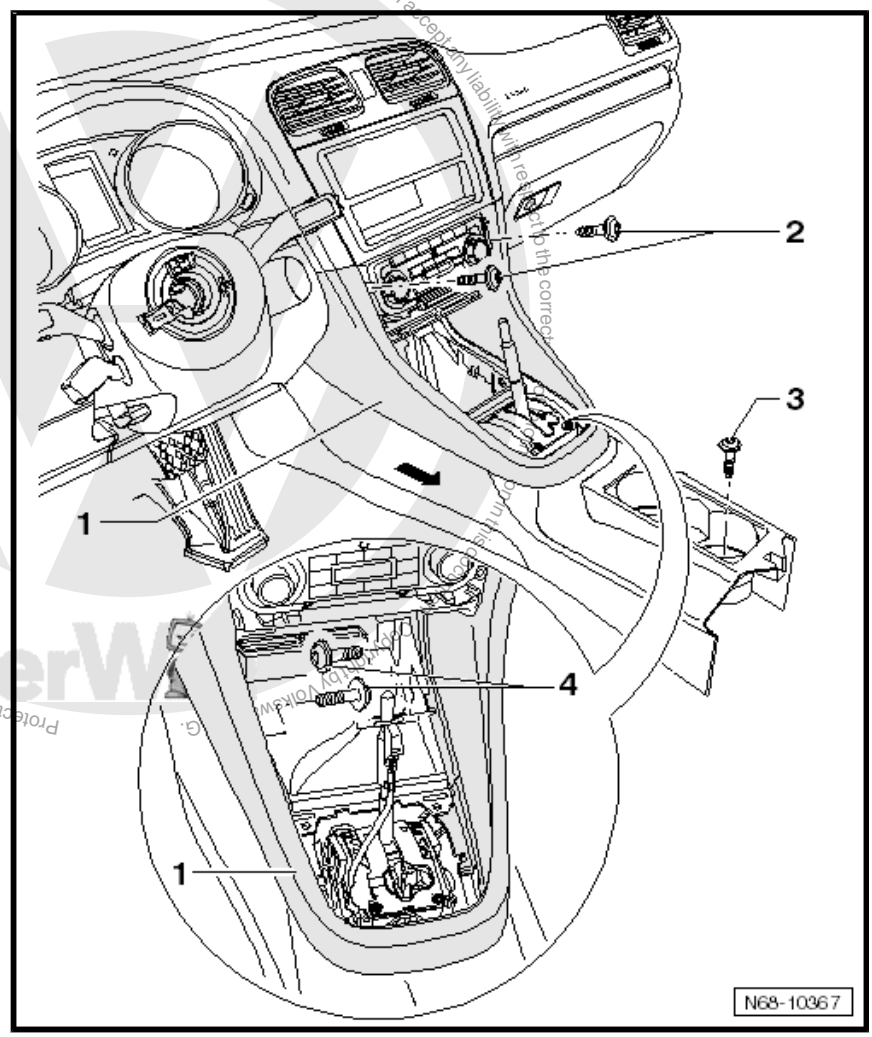

– Remove centre console -1- from vehicle.

Note

When installing, ensure centre console locks into mountings -arrows- of dash panel.

Downloaded from www.Manualslib.com manuals search engine

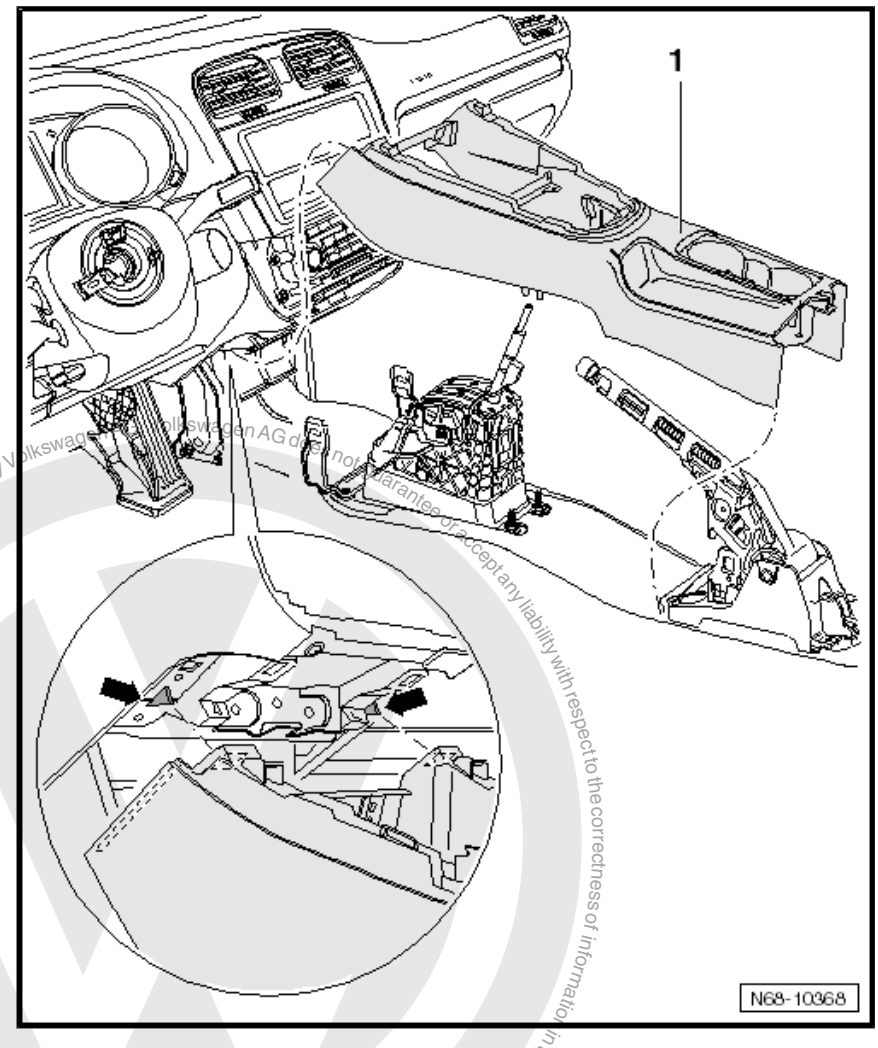

Protected by copyright. Copyright by Volkswagen AG. Volkswagen AG does not guarantee or accept any liability with respect to the correctness of information in this document. Copyright by Volkswagen AG. Reproduction for private or commercial purposes, in part or in whole, is not permitted unless authorised by Volkswagen AG.

2.4 Removing and installing Highline centre console (Jetta 2005 ▸, Golf Variant 2007 ▸)

2.4.1 Removing

– Switch off ignition.

Vehicles with automatic gearbox

– Move selector lever to position “N”.

– Release selector lever cover along with handle from cover ⇒ 6-speed automatic gearbox 09G; Rep. Gr. 37 ; Selector mechanism .

Vehicles with manual gearbox

– Release boot along with gearstick knob from cover ⇒ Rep. Gr. 34 ; Repairing selector mechanism .

Vehicles with dual clutch gearbox

– Move selector lever to position “N”.

Downloaded from www.Manualslib.com manuals search engine

– Release selector lever cover along with handle from cover ⇒ Dual clutch gearbox 02E; Rep. Gr. 34 ; Selector mechanism .

All vehicles

– Remove hand brake lever trim ⇒ Brake system; Rep. Gr. 46 ; Assembly overview - hand brake lever .

Vehicles with a CD changer

– Remove CD changer -1- ⇒ Communication; Rep. Gr. 91 ; CD changer .

– Remove lining mat -2- from storage compartment.

– Remove bolt -3- (1.5 Nm).

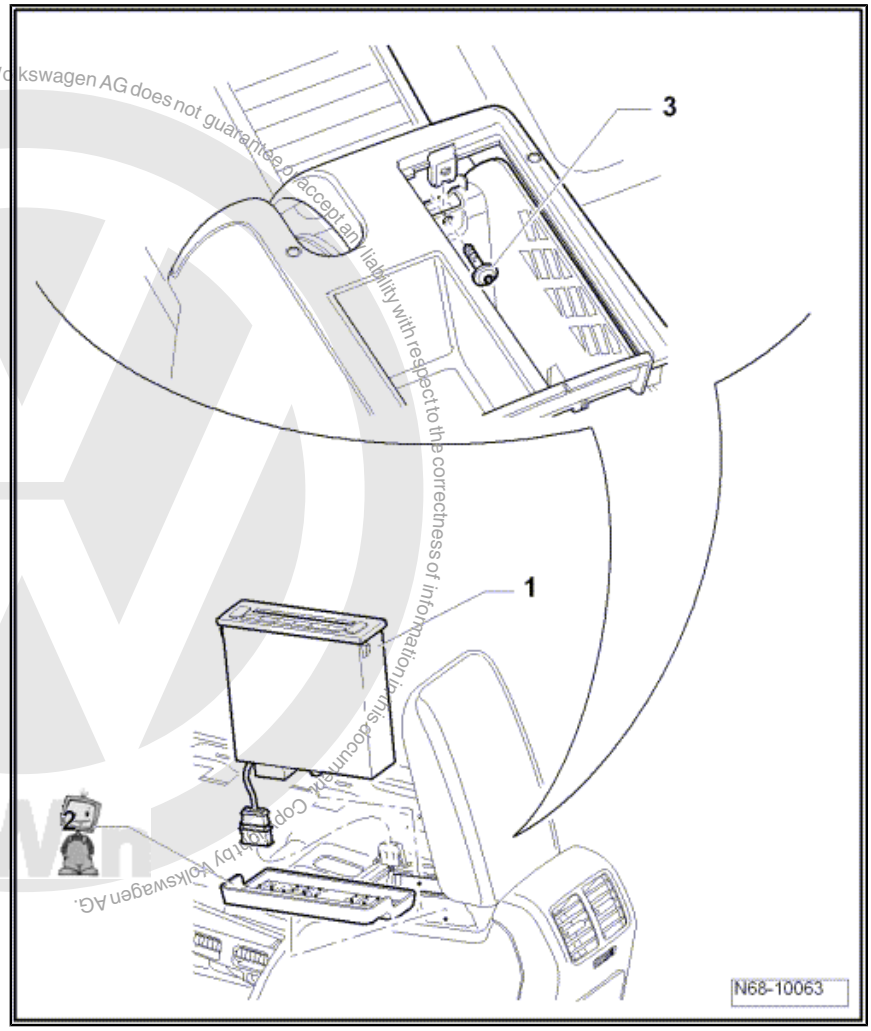

Protected by copyright. Copying for private or commercial purposes, in part or in whole, is not permitted unless authorised by Volkswagen AG. Volkswagen AG does not guarantee or accept any liability with respect to the correctness of information in this document. Copyright by Volkswagen AG.

Vehicles with a chilled storage compartment

– Remove lining mat -1- from storage compartment.

– Pull cover -2- out of fasteners in storage compartment.

– Remove bolt -3- (1.5 Nm).

Downloaded from www.Manualslib.com manuals search engine

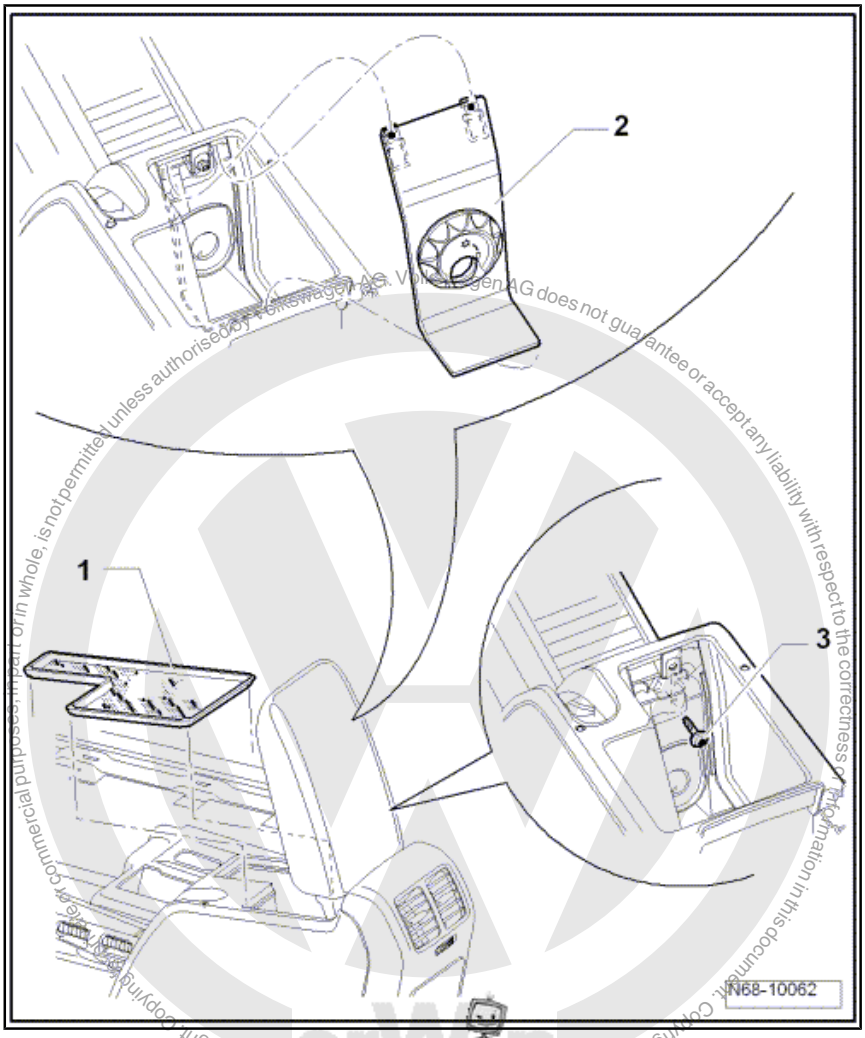

Protected by copyright. Copyright by Volkswagen AG.
Copyright by Volkswagen AG. Volkswagen AG does not guarantee or accept any liability with respect to the correctness of information in this document.
Protected by copyright. Copying for commercial purposes, in part or in whole, is not permitted unless authorised by Volkswagen AG.

All vehicles

– Open cup holder -1- and remove the two bolts -2- (1.5 Nm).

– Pull cup holder out of centre console.

Note

When installing, close cup holder and insert cup holder bottom first into centre console. Then open cup holder and install the two bolts -2-.

Downloaded from www.Manualslib.com manuals search engine

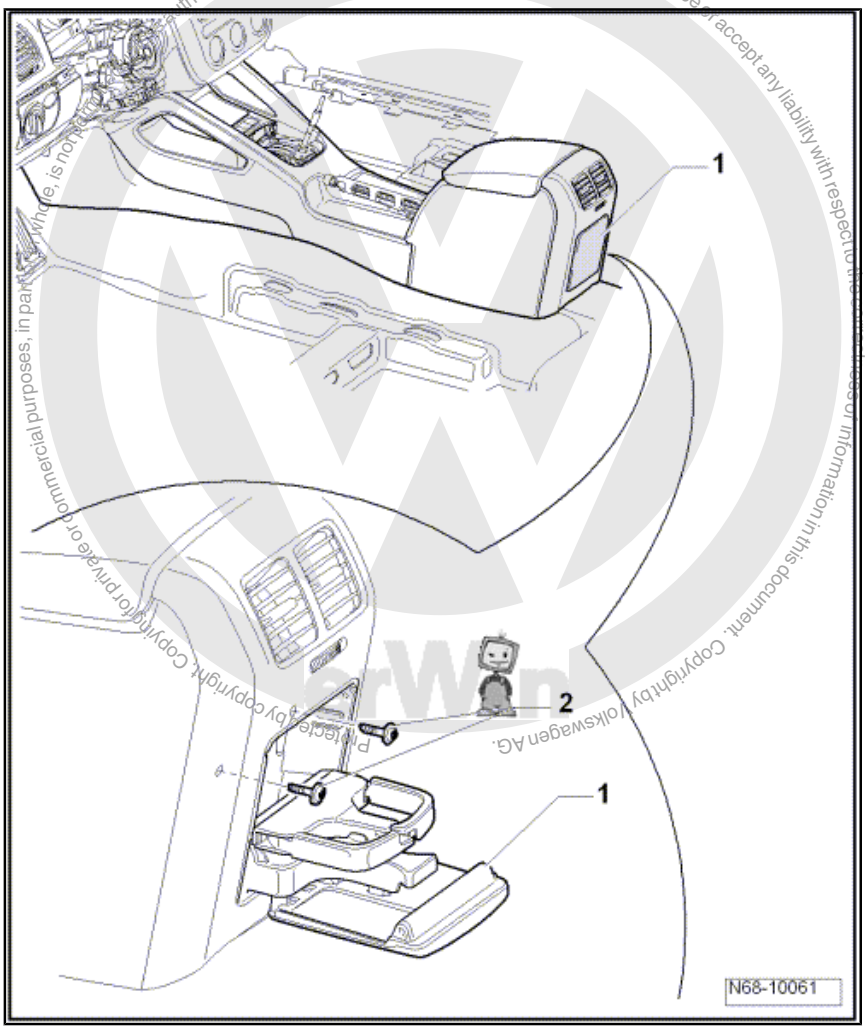

– Pull lower section of trim -1- out of fasteners -arrow-.
– Take upper section of trim out of mountings in centre console.

Downloaded from www.Manualslib.com manuals search engine

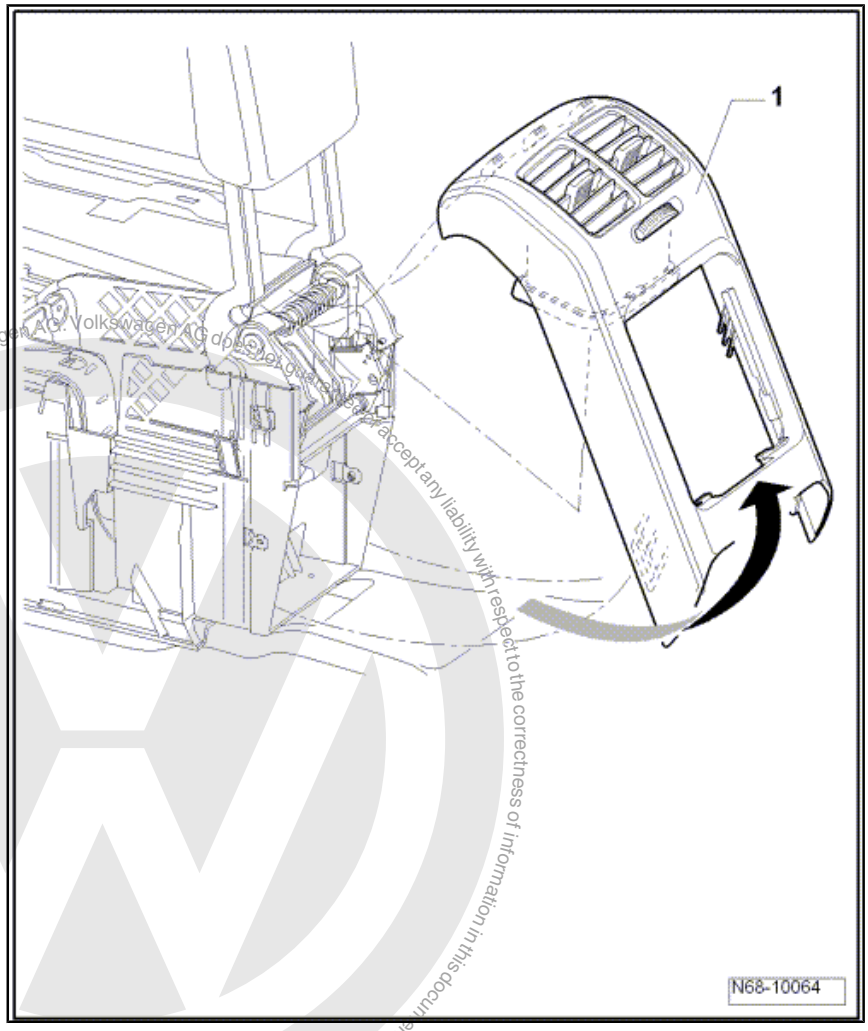

Protected by copyright. Copying for private or commercial purposes, in part or in whole, is not permitted unless authorised by Volkswagen AG. Volkswagen AG does not guarantee or accept any liability with respect to the correctness of information in this document. Copyright by Volkswagen AG.

- Apply handbrake (handbrake lever in uppermost position).
- Remove bolts -1- and -2- (1.5 Nm).
- Release lower end of extension -3- from fasteners.
- Pull extension upwards and disconnect connector for 12 V socket.

Downloaded from www.Manualslib.com manuals search engine

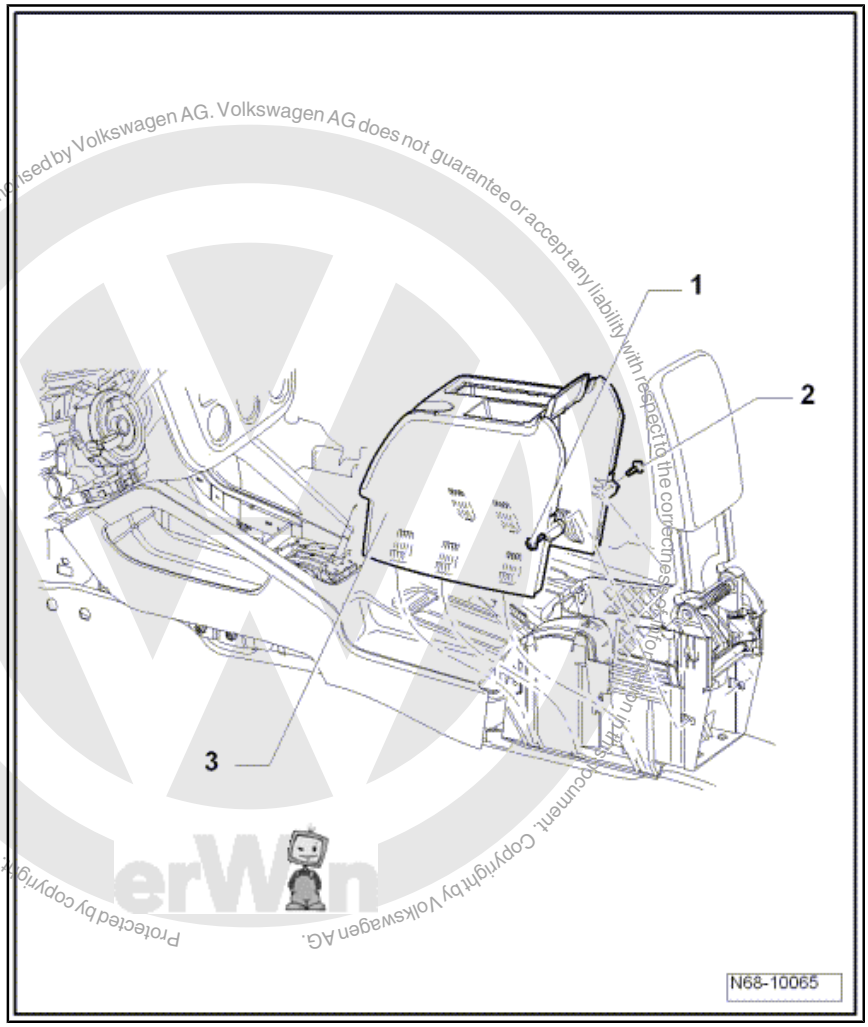

Protected by copyright. Copyright by Volkswagen AG.
Copyright by Volkswagen AG. Volkswagen AG does not guarantee or accept any liability with respect to the correctness of information in this document. Copying for private or commercial purposes, in part or in whole, is not permitted unless authorised by Volkswagen AG.

- Vehicles with manual gearbox, release noise insulation -1- from centre console.
- Remove the two bolts -2- (1.5 Nm).
- Release storage compartment -3- from centre console and disconnect wiring harnesses (dependent on vehicle equipment).

Note

An ashtray may be installed instead of a storage compartment -3-, but the removal is identical.

Downloaded from www.Manualslib.com manuals search engine

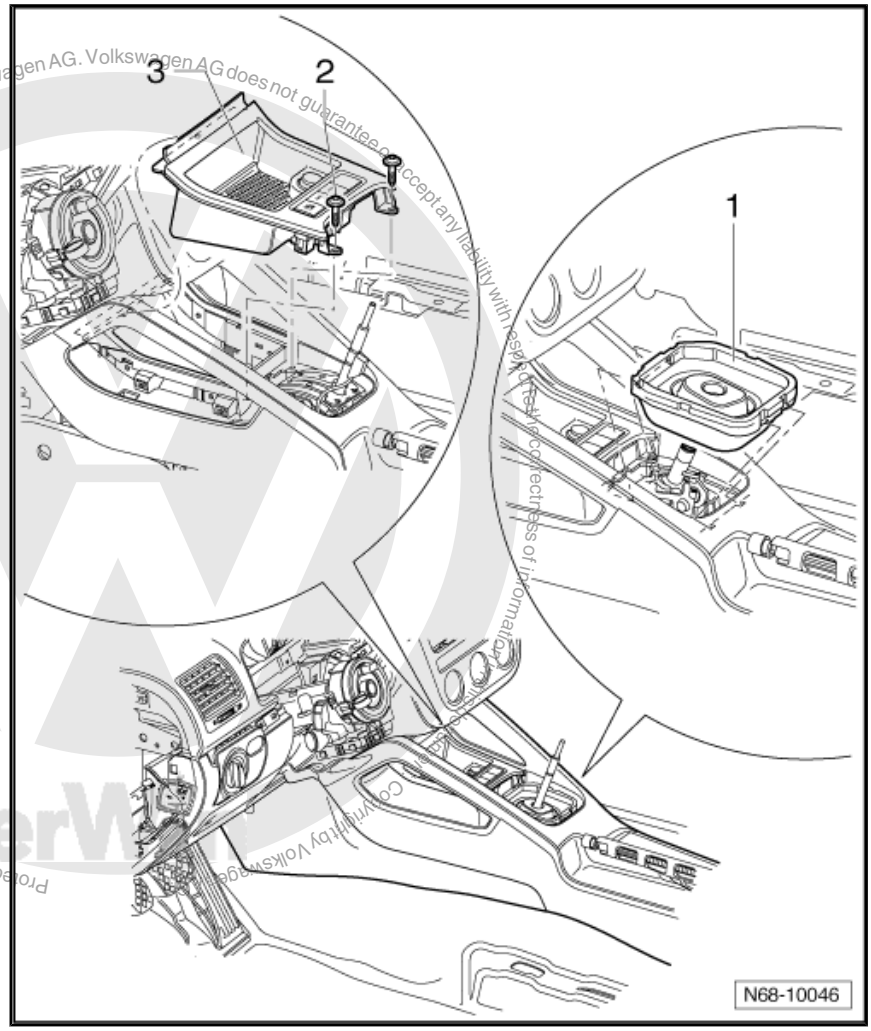

Protected by copyright. Copying for private or commercial purposes, in part or in whole, is not permitted unless authorised by Volkswagen AG. Volkswagen AG does not guarantee or accept any liability with respect to the correctness of information.
Copyright by Volkswagen AG

– Unclip cover -1- from trim using a small screwdriver.
– Remove bolt -2- (1.5 Nm).
– Pull left footwell trim -3- out of fasteners.

Note

Removal of right footwell trim is identical.

– Unclip both side trims -4- from centre console by releasing fasteners with a removal wedge -3409- .

Downloaded from www.Manualslib.com manuals search engine

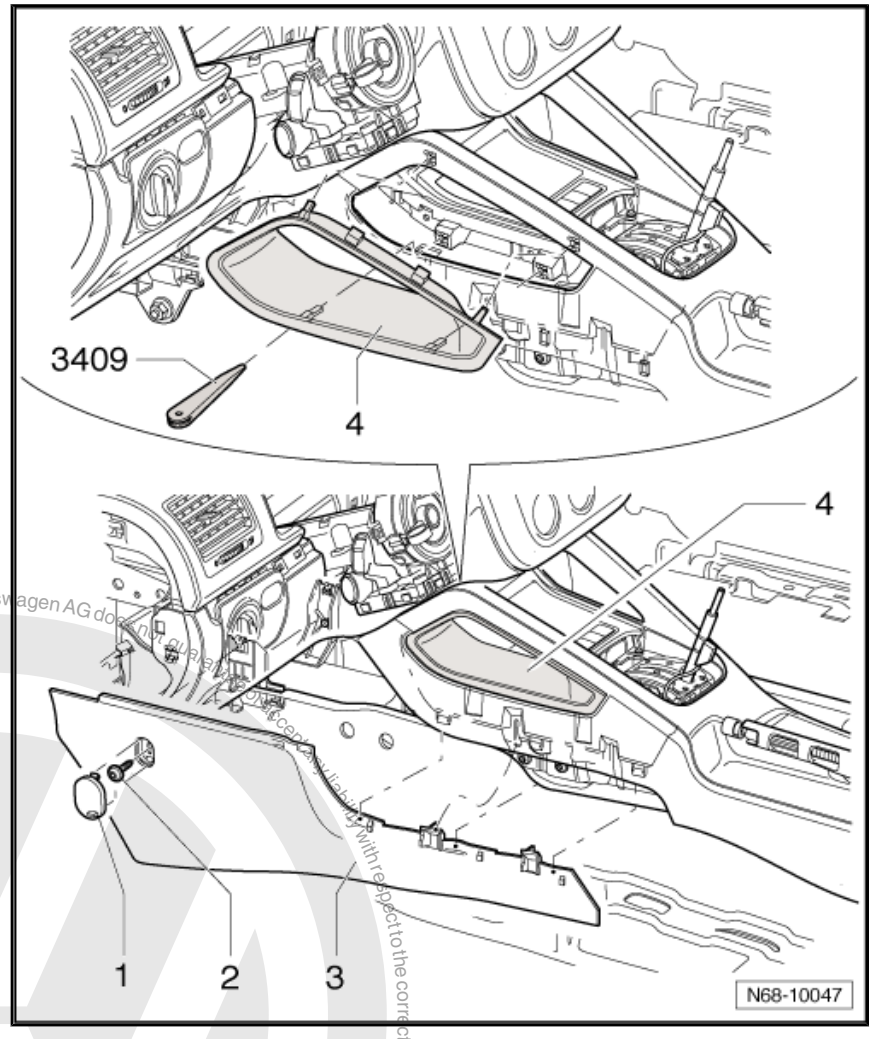

– Remove lining mats -1- from rear cup holder or from storage compartment.
– Remove two bolts each -2- and -3- (1.5 Nm).
– Remove two bolts each -4- and -5- (1.5 Nm).
– Remove lining mat from rear cup holder and remove bolt -6- (1.5 Nm).

Note

When installing, bolts must be installed in sequence -2-, -3-, -4-, -5- and -6-.

– Pull centre console upwards as far as possible.

Protected by copyright. Copying for private or commercial purposes, in part or in whole, is not permitted unless authorised by Volkswagen AG. Volkswagen AG does not give any warranty with respect to the correctness of information in this document. Copyright by Volkswagen AG.

Downloaded from www.Manualslib.com manuals search engine

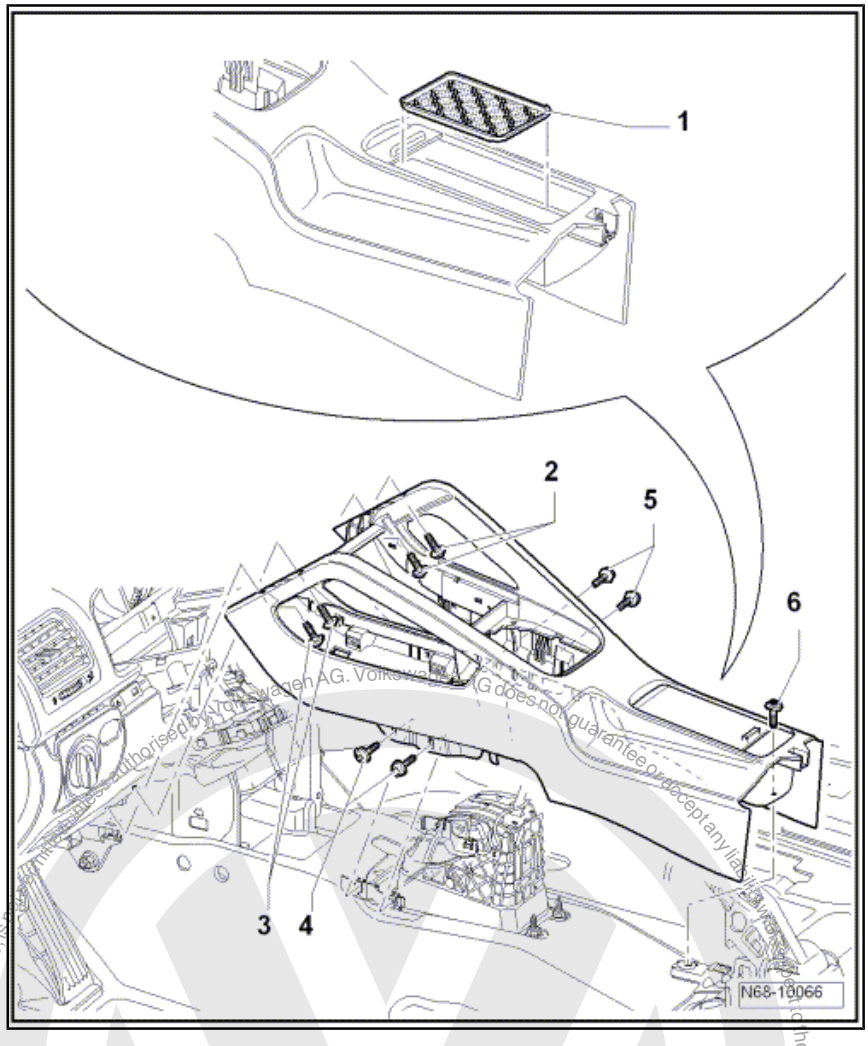

Vehicles with no CD-changer or I-pod adapter

– Pull air duct in direction of -arrow-.

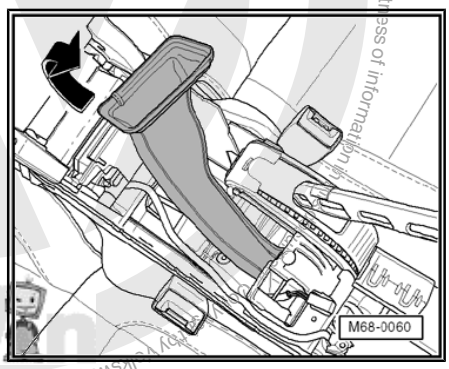

Note

Vehicles with CD-changer or I-pod adapter, there is no requirement to remove air duct.

All vehicles

– Remove bolts -1-, -2-, -3- and -4- (1.5 Nm).

– First remove carrier for centre console -5- trim then remove centre console from vehicle.

Protected by copyright. Copying for private or commercial purposes, in part or in whole, is not permitted unless authorised by Volkswagen AG. Volkswagen AG does not guarantee or accept any liability with respect to the correctness of information in this document. Copyright by Volkswagen AG.

Downloaded from www.Manualslib.com manuals search engine

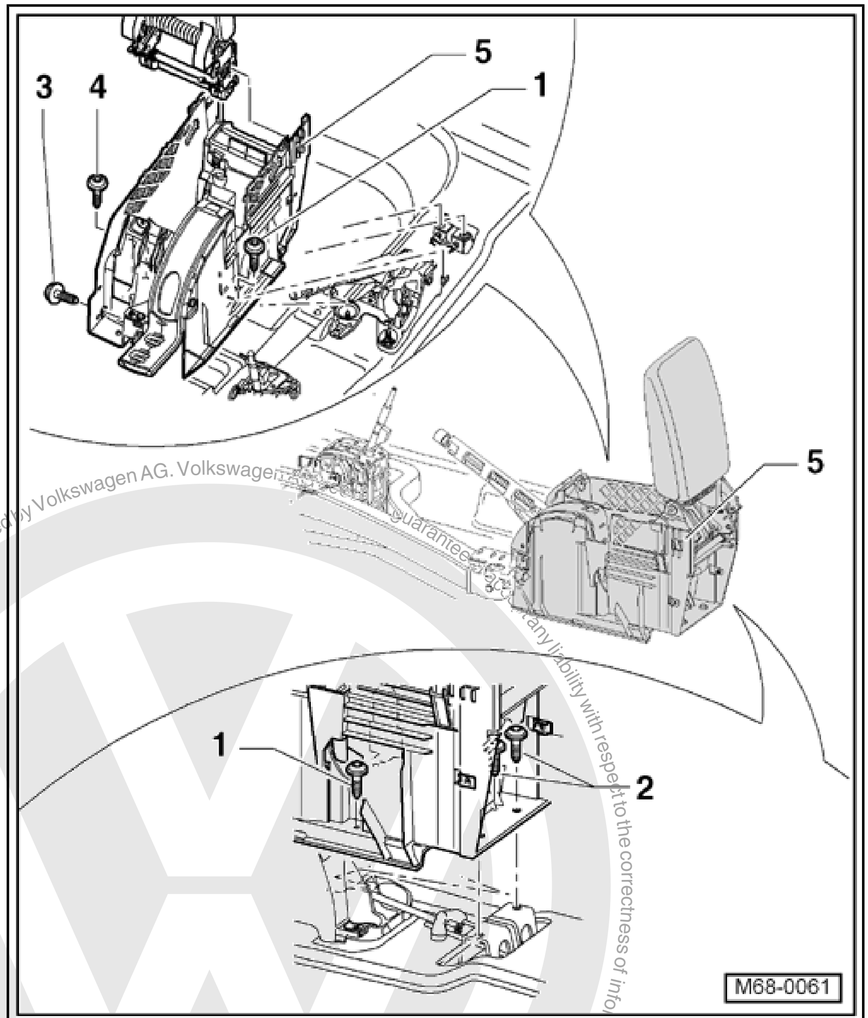

Protected by copyright. Copying for private or commercial purposes, in part or in whole, is not permitted unless authorised by Volkswagen AG. Volkswagen AG does not guarantee or accept any liability with respect to the correctness of information in this document. Copyright by Volkswagen AG.

2.4.2 Installing

– Install in reverse order of removal.

2.5 Removing and installing Highline centre console (Jetta 2010 ‣, Golf Variant 2010 ‣)

2.5.1 Removing

– Switch off ignition.

Vehicles with automatic gearbox

– Loosen gearstick boot from cover ⇒ Rep. Gr. 37 .

Vehicles with manual or dual clutch gearbox

– Loosen gearstick boot from cover ⇒ Rep. Gr. 34 .

All vehicles

– Remove handbrake lever trim ⇒ Rep. Gr. 46 .

– Remove dash panel middle trim (Jetta 2010 ‣, Golf Variant 2010 ‣) ⇒ page 52 .

Downloaded from www.Manualslib.com manuals search engine

– Remove air conditioner controls unit / heater controls unit trim (Jetta 2010 ▸, Golf Variant 2010 ▸) ⇒ page 53 .

– Remove centre cover (Jetta 2010 ▸, Golf Variant 2010 ▸) ⇒ page 72 .

Vehicles without CD changer

– Remove lining mat -1- from storage compartment.

– If fitted, remove “AUX IN socket” -2- ⇒ Communication; Rep. Gr. 91 ; Removing and installing connection for external audio sources -R199- .

– Unclip cover -4- from fasteners in storage compartment.

– Remove bolt -3- (1.5 Nm).

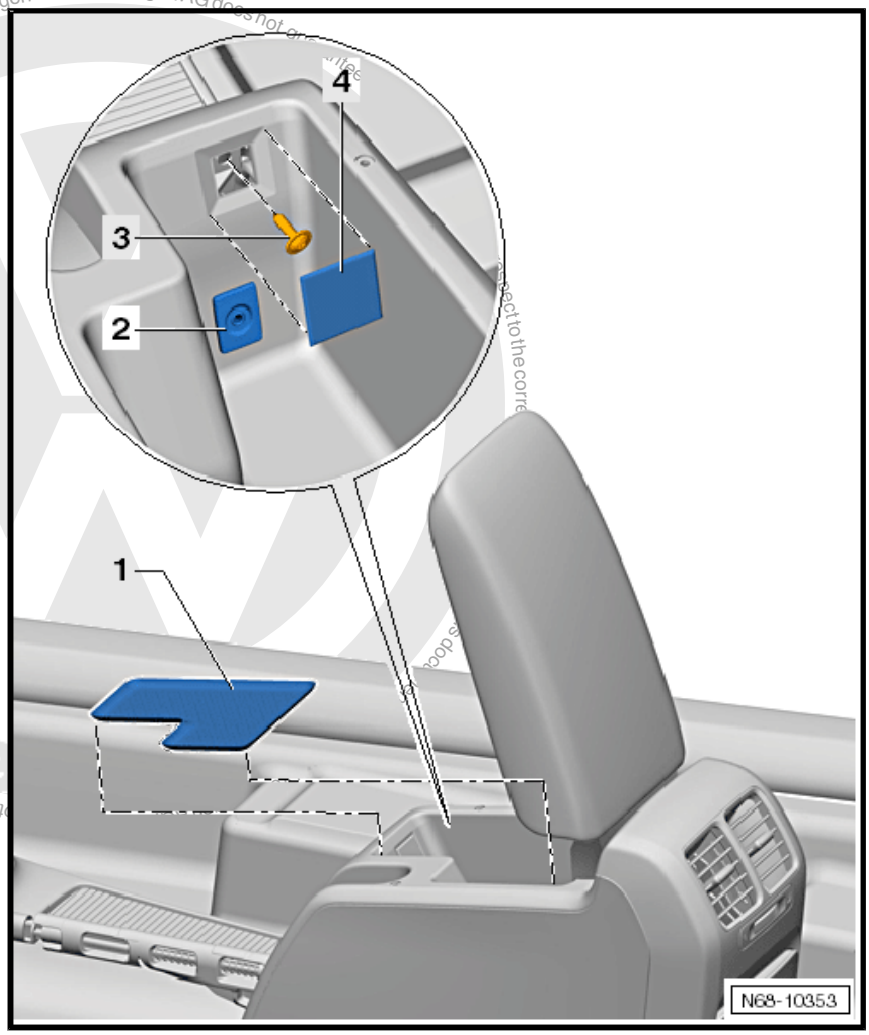

Vehicles with a CD changer

– Remove CD changer -1- ⇒ Communication; Rep. Gr. 91 ; Removing and installing CD changer .

– Remove lining mat -2- from storage compartment.

– Remove bolt -3- (1.5 Nm).

Downloaded from www.Manualslib.com manuals search engine

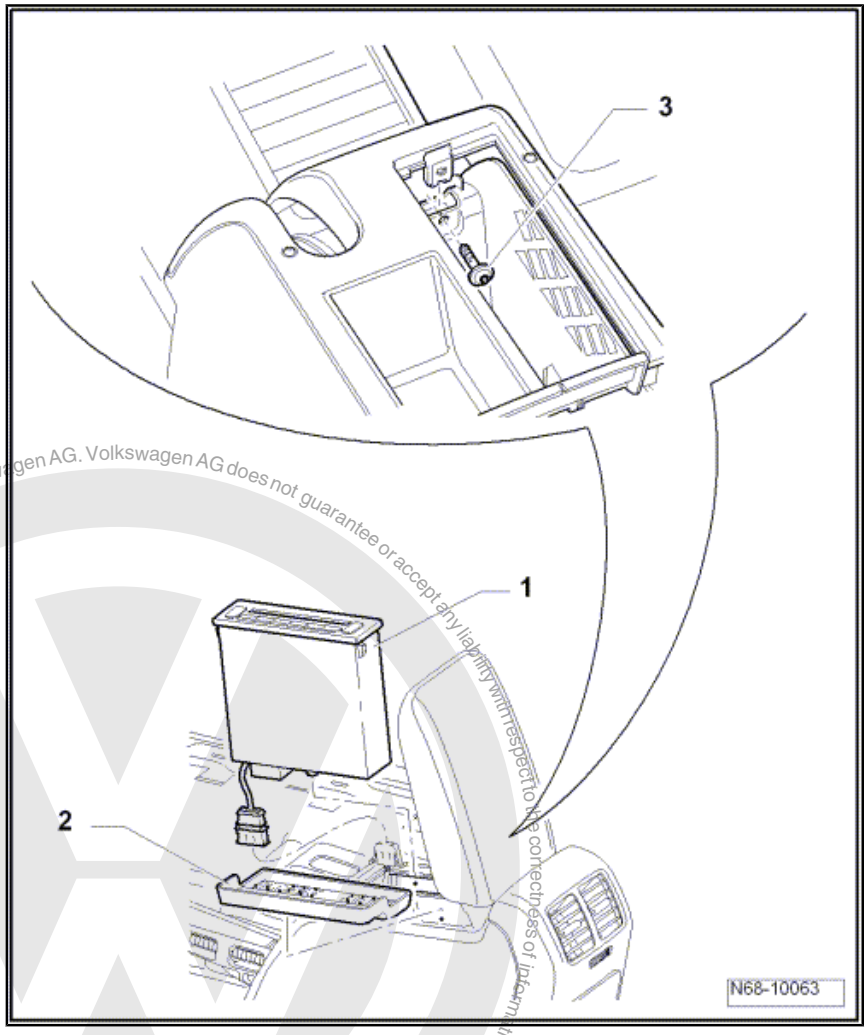

Protected by copyright. Copying for private or commercial purposes, in part or in whole, is not permitted unless authorised by Volkswagen AG. Volkswagen AG does not guarantee or accept any liability with respect to the correctness of information in this document. Copyright by Volkswagen AG.

All vehicles

– Open cup holder -1- and remove the two bolts -2- (1.5 Nm).
– Pull cup holder out of centre console.

Note

When installing, close cup holder and insert cup holder bottom first into centre console. Then open cup holder and install the two bolts -2-.

Downloaded from www.Manualslib.com manuals search engine

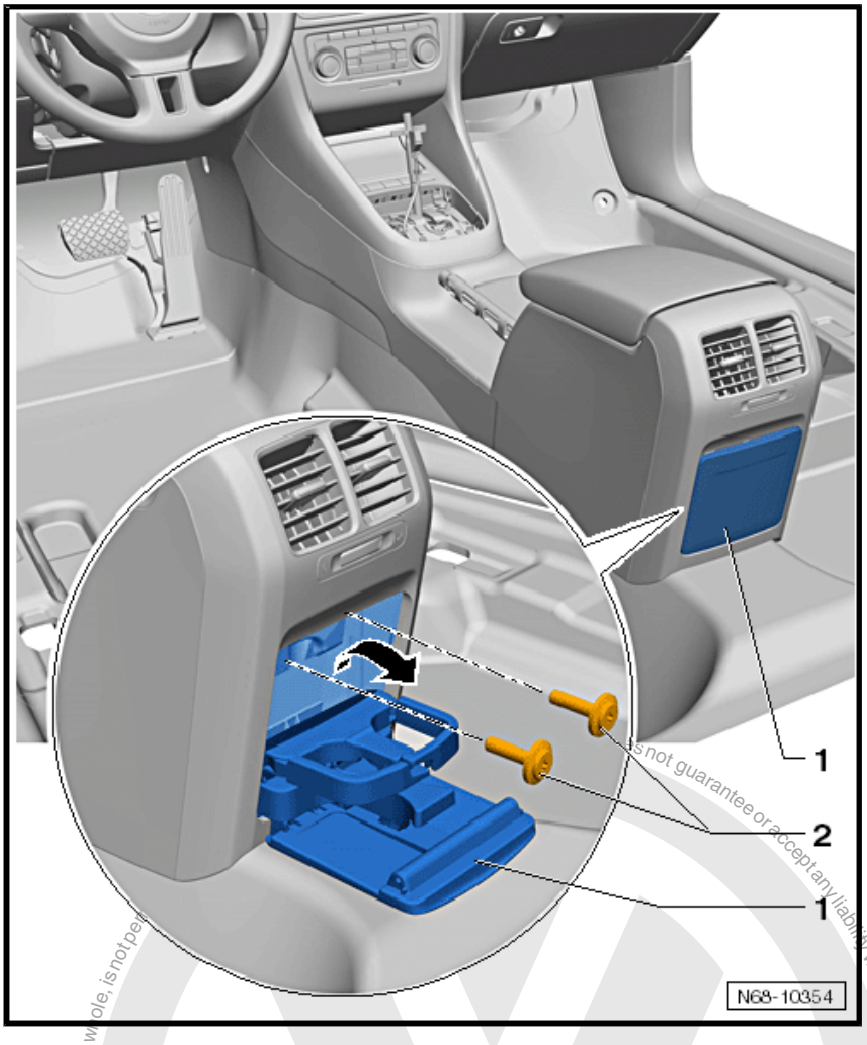

– Pull lower section of trim -1- out of mountings -arrow-.
– Take upper section of trim out of mountings in centre console.

Protected by copyright. Copying for private or commercial purposes, in part or in whole, is not permitted unless authorised. Volkswagen AG does not guarantee or accept any liability with respect to the correctness of information in this document. Copyright by Volkswagen AG.

Downloaded from www.Manualslib.com manuals search engine

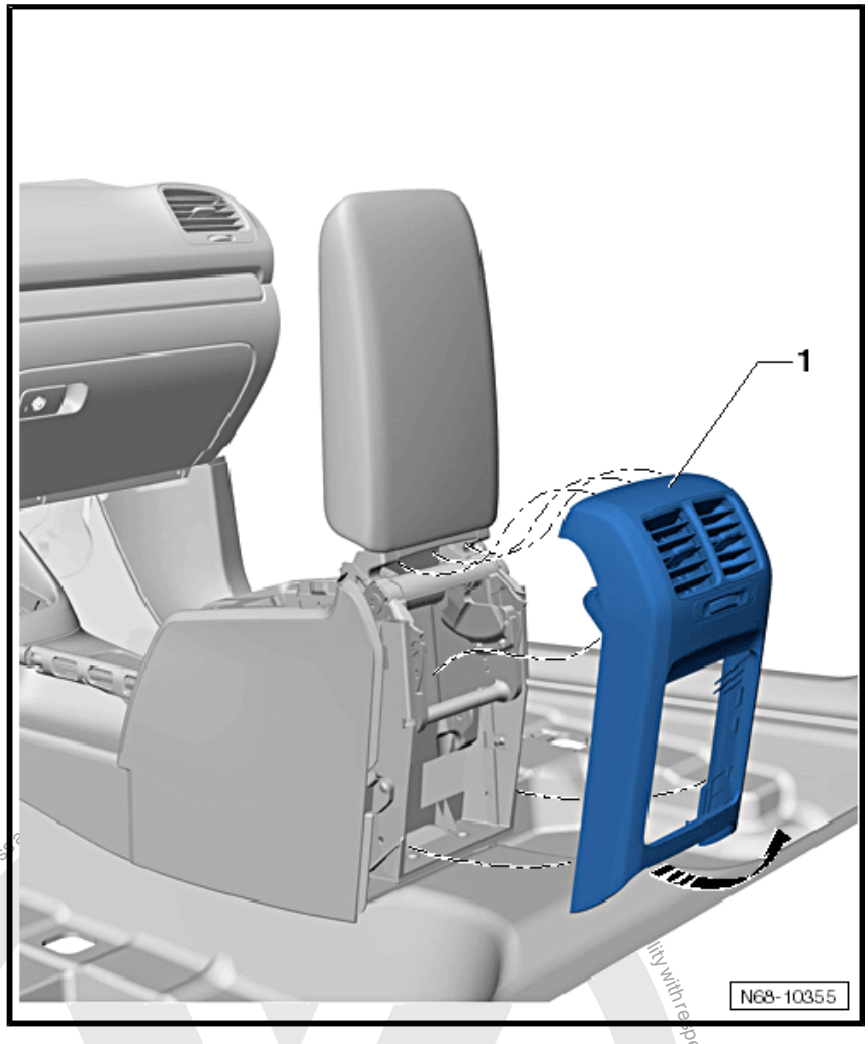

- If fitted, remove "AUX IN socket" -1- ⇒ Communication; Rep. Gr. 91 ; Removing and installing connection for external audio sources -R199-
- Remove bolts -2- and -3- (1.5 Nm).
- Release lower end of extension -4- from fasteners.

Protected by copyright. Copying for private or commercial purposes, in part or in whole, is not permitted unless authorised by Volkswagen AG. Copyright by Volkswagen AG. No liability with respect to the correctness of information in this document.

Downloaded from www.Manualslib.com manuals search engine

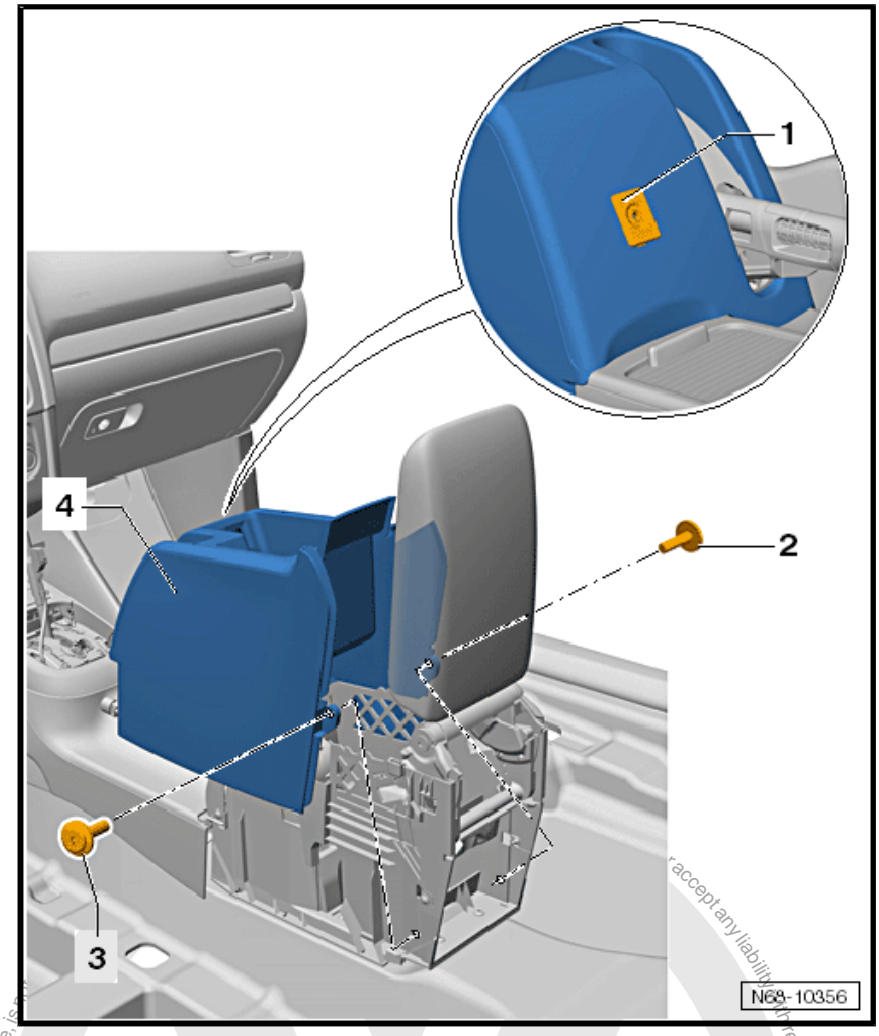

- Release gearstick insulation -3- from centre console (only vehicles with a gearstick).
- Remove the two bolts -2- (1.5 Nm).
- Release ashtray unit -1- from centre console and disconnect wiring harness (dependent on vehicle equipment).

Note

A storage compartment may be installed instead of an ashtray -1-, but the removal is identical.

Protected by copyright. Copying for private or commercial purposes, in part or in whole, is not permitted unless authorised by Volkswagen AG. Copyright by Volkswagen AG. We accept any liability with respect to the correctness of information in this document.

Downloaded from www.Manualslib.com manuals search engine

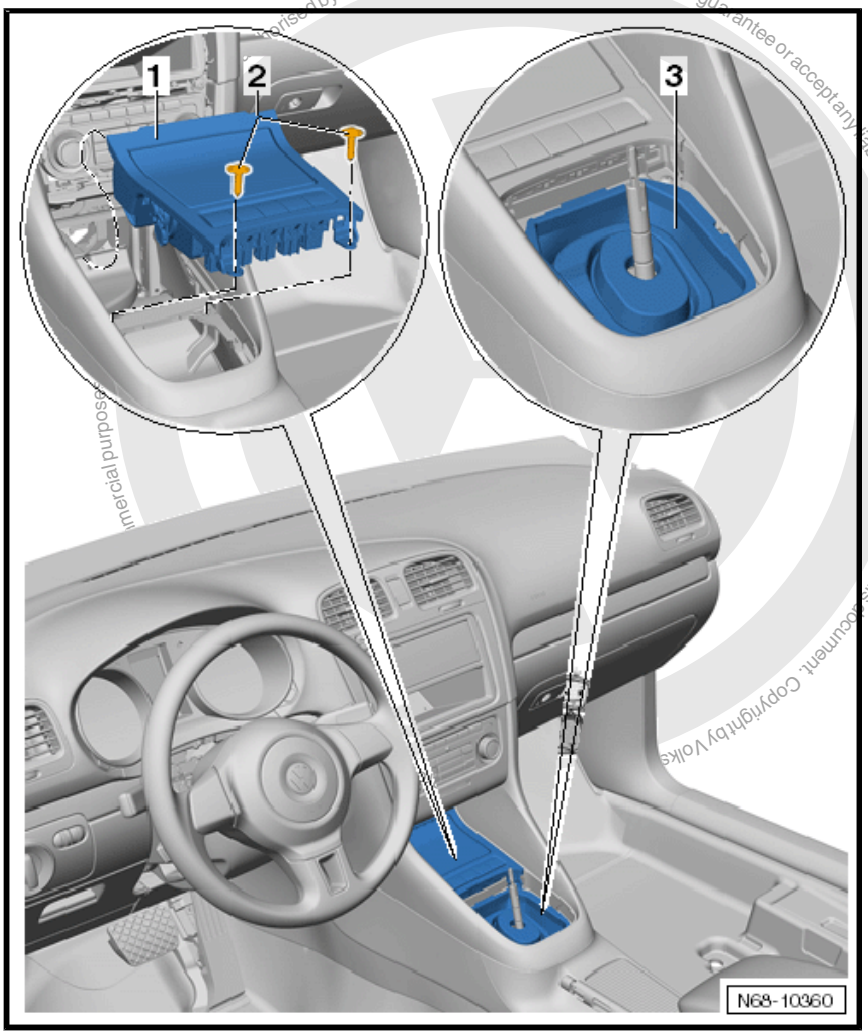

– Remove bolt -1- (1.5 Nm).
– Pull left footwell trim -2- out of mountings.

Note

- *Removal of right footwell trim is identical.*
- *When installing, first insert footwell trim -2- into mounting -3-.*

Downloaded from www.Manualslib.com manuals search engine

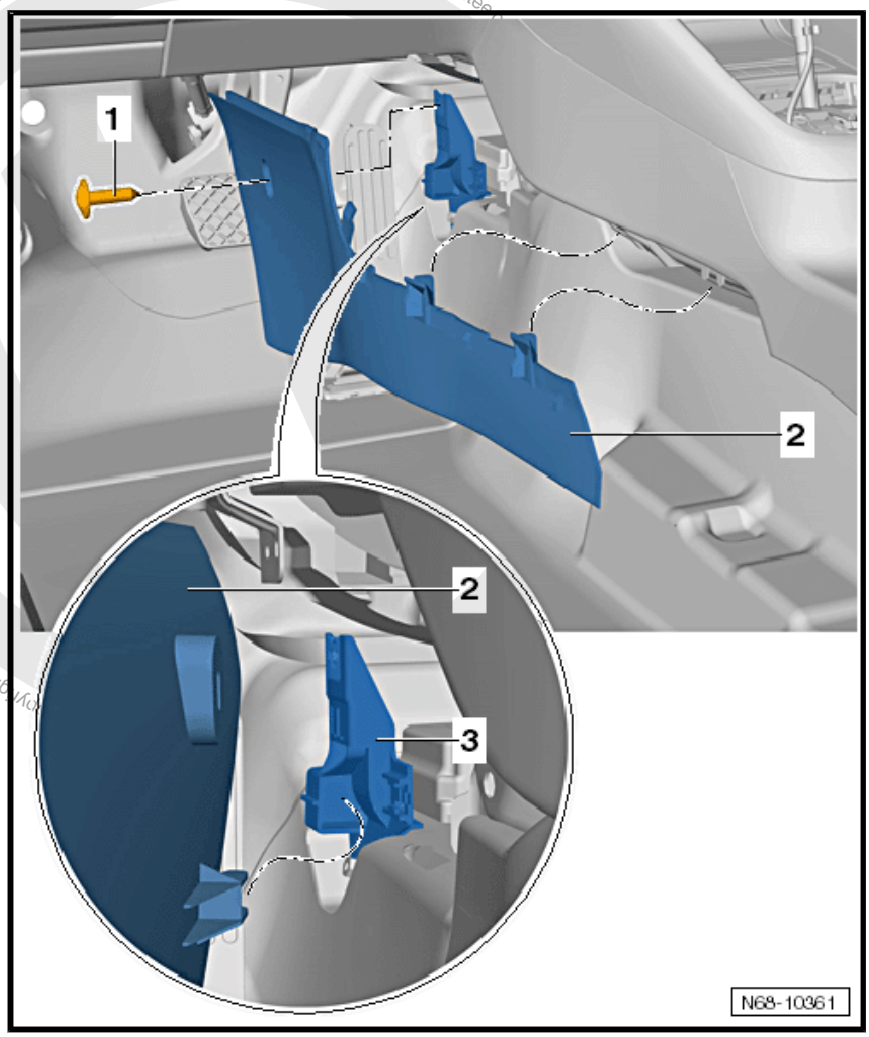

– Remove lining mat -4- from storage compartment.
– Remove bolt -5- (1.5 Nm).
– Remove the two bolts -3- (1.5 Nm).
– Remove the two bolts -2- (1.5 Nm).
– Pull centre console cover -1- out in direction of -arrow-.

Note

When installing, bolts must be fitted in sequence -2-, -5- and -3-.

Downloaded from www.Manualslib.com manuals search engine

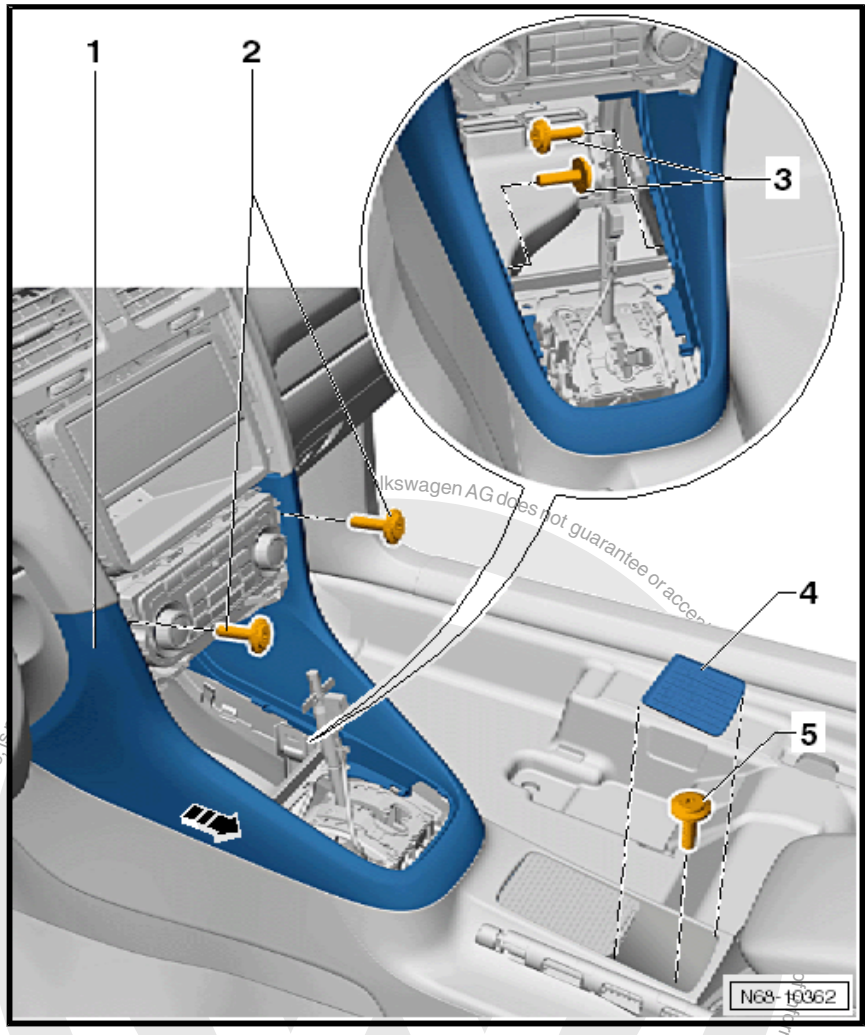

– Remove centre console -1- from vehicle.

Note

When installing, ensure centre console -1- locks into mountings -arrows- of dash panel.

Protected by copyright. Copying for private or commercial purposes, in part or in whole, is not permitted unless authorised by Volkswagen AG. Volkswagen AG does not guarantee or accept any liability with respect to the correctness of information in this document. Copyright by Volkswagen AG.

Downloaded from www.Manualslib.com manuals search engine

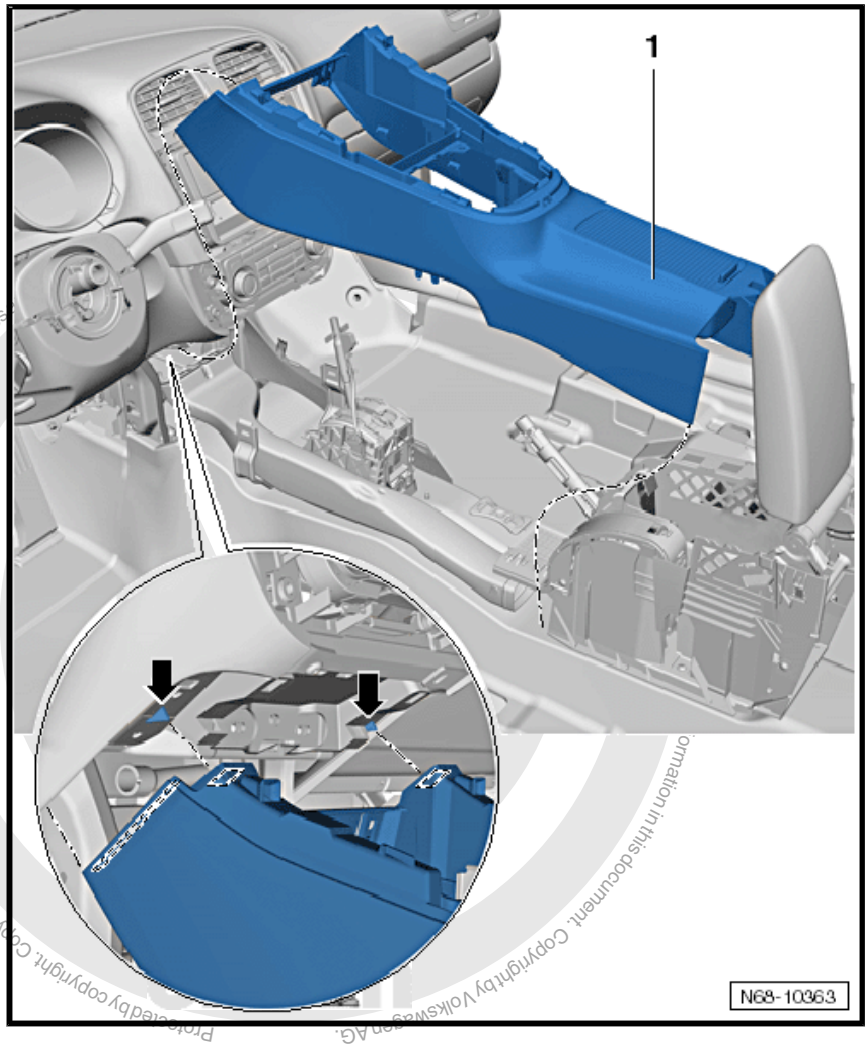

Protected by copyright. Copying for private or commercial purposes, in part or in whole, is not permitted unless ... formation in this document. Copyright by Volkswagen AG.

– Remove bolts -1-, -2-, -3- and -4- (1.5 Nm).
– Remove centre console trim carrier -5- from vehicle.

Downloaded from www.Manualslib.com manuals search engine

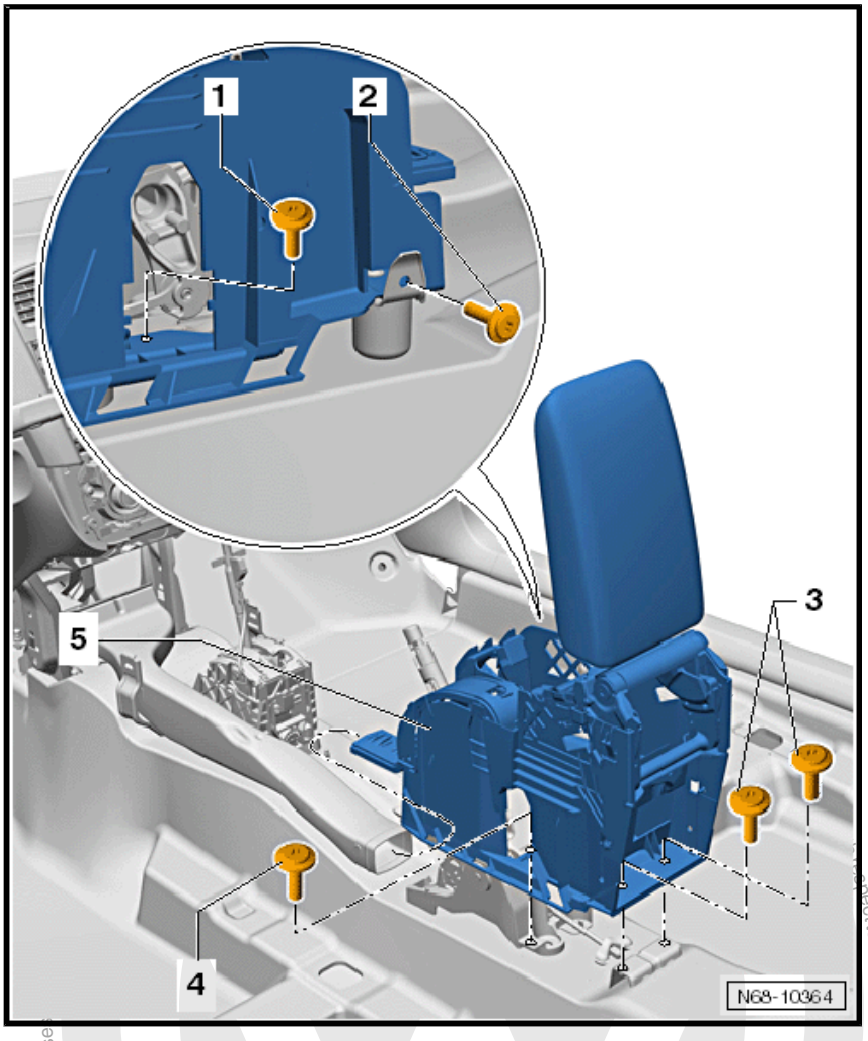

2.6 Removing and installing mounting bracket for centre console (Jetta 2005 ▸, Golf Variant 2007 ▸)

2.6.1 Removing

– Switch off ignition.

– Remove centre console:

◆ Basic version (Jetta 2005 ▸, Golf Variant 2007 ▸) ⇒ page 7

◆ Highline (Jetta 2005 ▸, Golf Variant 2007 ▸) ⇒ page 16 .

– Remove the two nuts -1- (8 Nm) and remove mounting bracket -2-.

Protected by copyright. Copying for private or commercial purposes, in part or in whole, is not permitted unless authorised by Volkswagen AG. Volkswagen AG does not guarantee or accept any liability with respect to the correctness of information in this document. Copyright by Volkswagen AG.

Downloaded from www.Manualslib.com manuals search engine

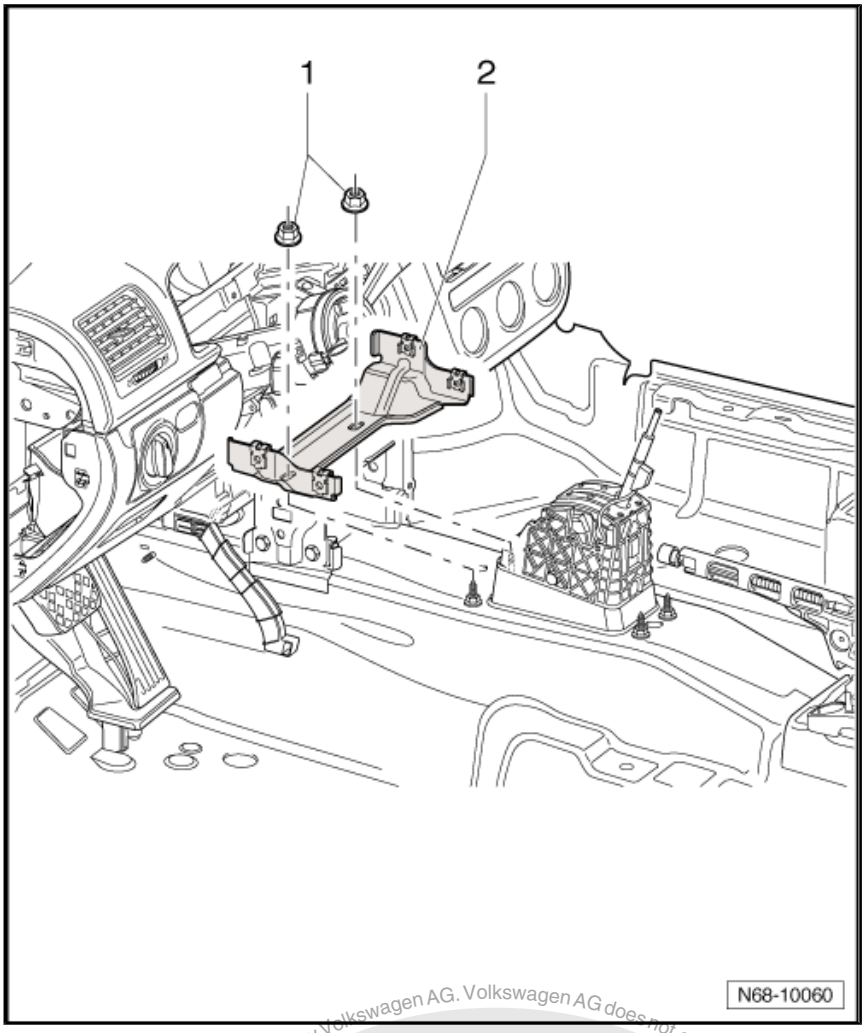

2.6.2 Installing

– Install in reverse order of removal.

2.7 Removing and installing mounting bracket for centre console and mounting bracket for footwell trim (Jetta 2010 ▸, Golf Variant 2010 ▸)

2.7.1 Removing

– Switch off ignition.

– Remove centre console:

◆ Basic version (Jetta 2010 ▸, Golf Variant 2010 ▸) ⇒ page 11 .

◆ Highline (Jetta 2010 ▸, Golf Variant 2010 ▸) ⇒ page 25 .

– Remove the two nuts -3- (8 Nm) and remove mounting bracket -2- for centre console.

– Remove nuts -4- (2.5 Nm) and remove mounting bracket -1- for footwell trim.

Protected by copyright. Copyright by Volkswagen AG. Volkswagen AG does not guarantee or accept any liability with respect to the correctness of information in this document. Copyright by Volkswagen AG. Copying for private or commercial purposes, in part or in whole, is not permitted unless authorised by Volkswagen AG.

Downloaded from www.Manualslib.com manuals search engine

Note

Removal of mounting bracket for right footwell trim is identical.

Protected by copyright. Copying for private or commercial purposes, in part or in whole, is not permitted unless authorised by Volkswagen AG. Volksw

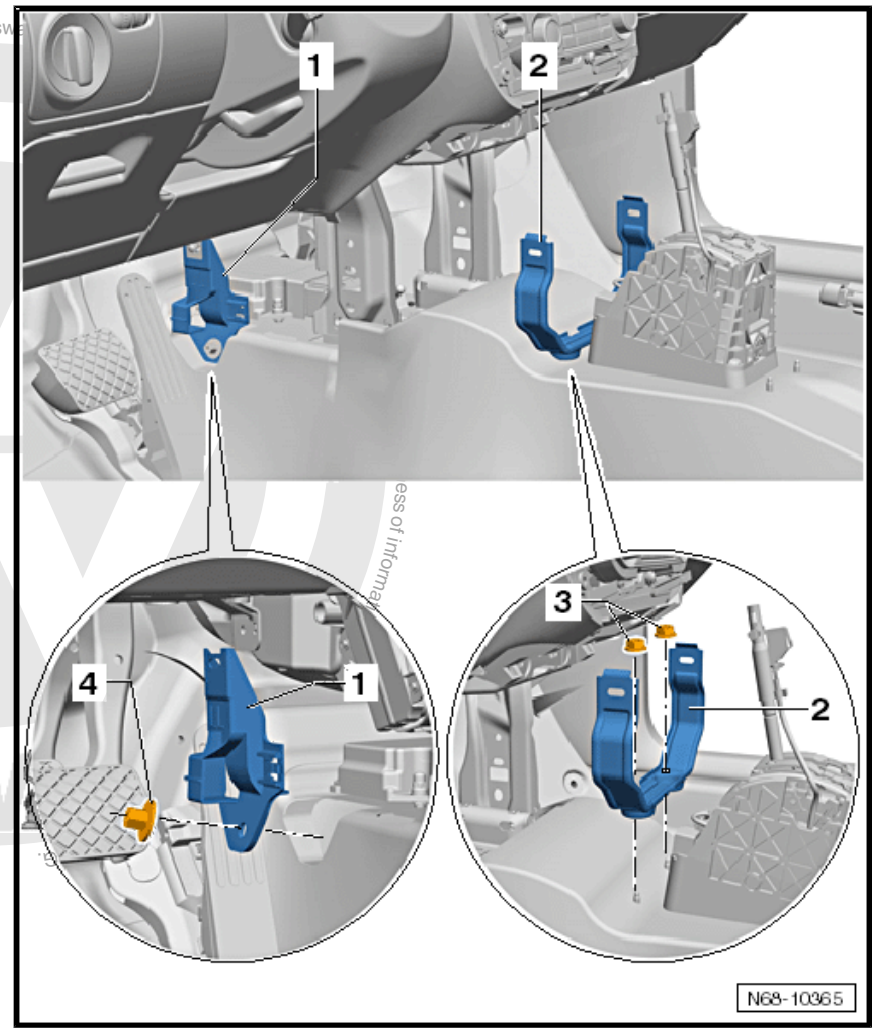

2.7.2 Installing

– Install in reverse order of removal.

2.8 Removing and installing cup holder in Highline centre console

2.8.1 Removing

All vehicles

– Open cup holder -1- and remove the two bolts -2- (1.5 Nm).

– Pull cup holder out of centre console.

Downloaded from www.Manualslib.com manuals search engine

Note

When installing, close cup holder and insert cup holder bottom first into centre console. Then open cup holder and install the two bolts -2-.

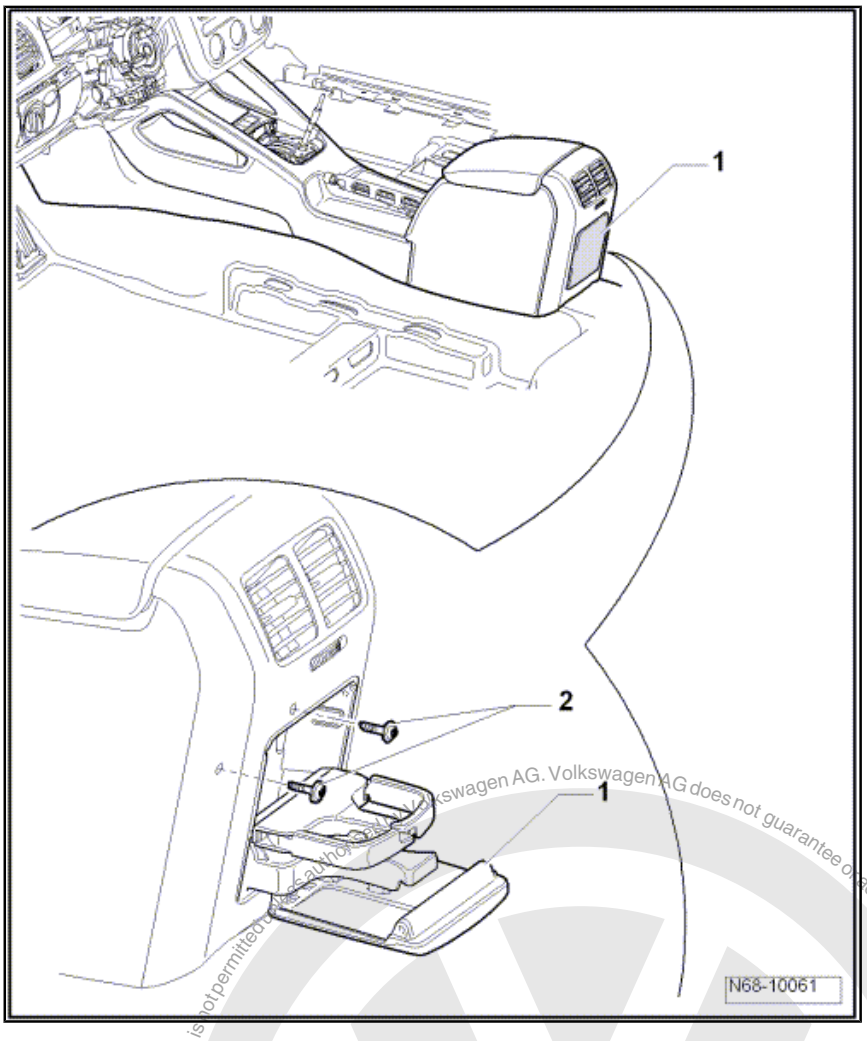

2.8.2 Installing

– Install in reverse order of removal.

2.9 Repairing cup holder in centre console, Highline

A loose cup holder or one that has fallen apart does not necessarily have to be replaced. It could possibly be repaired.

2.9.1 Checking for possible repair

The part should be replaced only if it cannot be repaired because, for example, components are deformed, broken, broken off or otherwise damaged and the normal function of the cup holder is thus no longer assured.

– Remove cup holder in centre console, Highline ⇒ page 37

Protected by copyright. Copying for private or commercial purposes, in part or in whole, is not permitted unless authorised by Volkswagen AG. Volkswagen AG does not guarantee or accept any liability with respect to the correctness of information in this document. Copyright by Volkswagen AG.

Downloaded from www.Manualslib.com manuals search engine

– Loosen cover -1- from cup holder -arrow-.

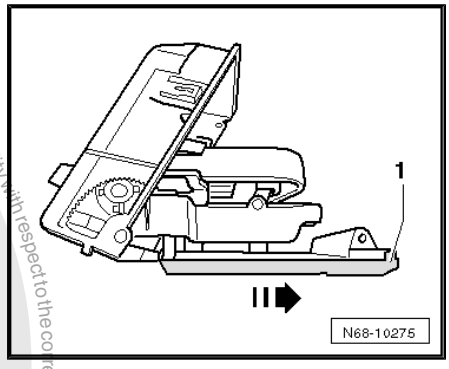

– Check all four attachments -1- of cup holder for damage.
– If an attachment -2- is severely deformed, the cup holder must be renewed.

Note

The cup holder must also be renewed if other components are damaged which normally ensure that the cup holder can function as designed.

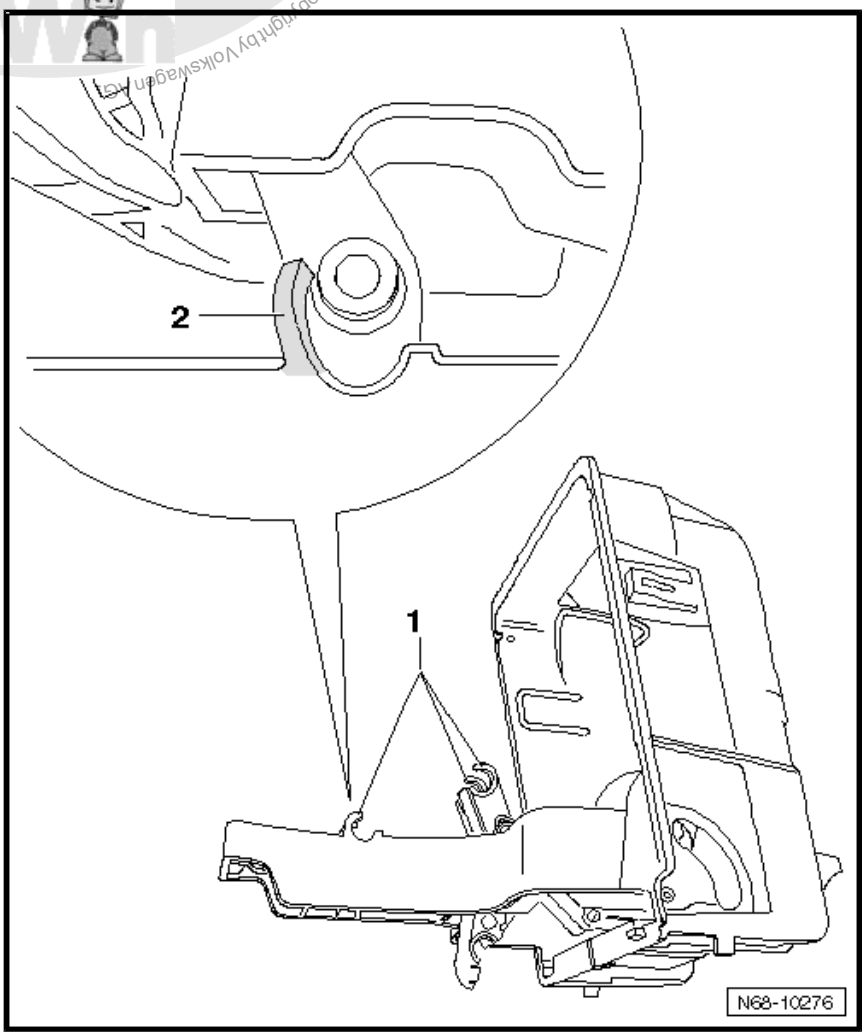

Protected by copyright. Copying for commercial purposes, in part or in whole, is not permitted unless authorised by Volkswagen AG. Volkswagen AG does not guarantee or accept any liability with respect to the correctness of information in this document. Copyright by Volkswagen AG.

Downloaded from www.Manualslib.com manuals search engine

2.9.2 Repairing cup holder

– Place lower cover -1- over outer mounting pins -2- and -3- in cup holder.

– Position mounting pin -4- in front of mounting -5-.

– Place upper part -6- over pin -7- and mounting pins -8- in cup holder.

– The mounting -9- is placed in front of pin -10-.

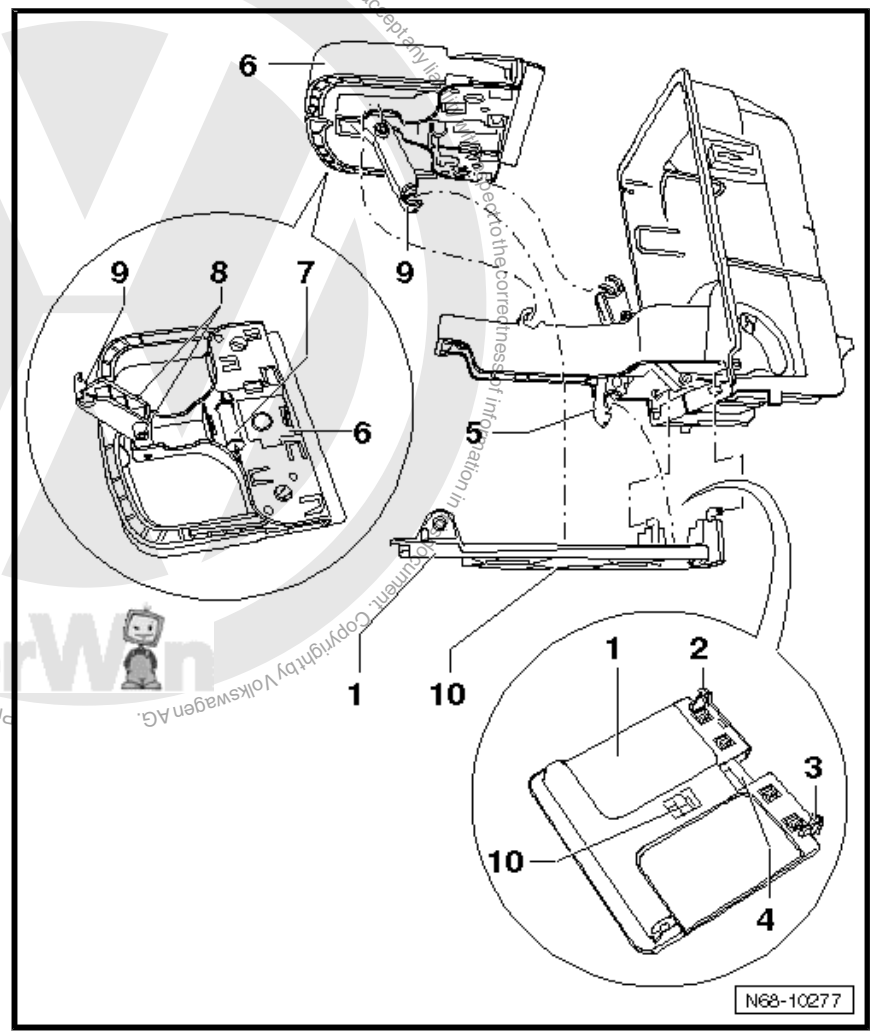

– Close cup holder; mountings -1- and -3- engage with corresponding pins -2- and -4-.

– Open cup holder and insert cover.

Protected by copyright. Copying for private or commercial purposes, in part or in whole, is not permitted unless authorised by Volkswagen AG. Volkswagen AG does not guarantee or accept any liability with respect to the correctness of information in this document. Copyright by Volkswagen AG.

Downloaded from www.Manualslib.com manuals search engine

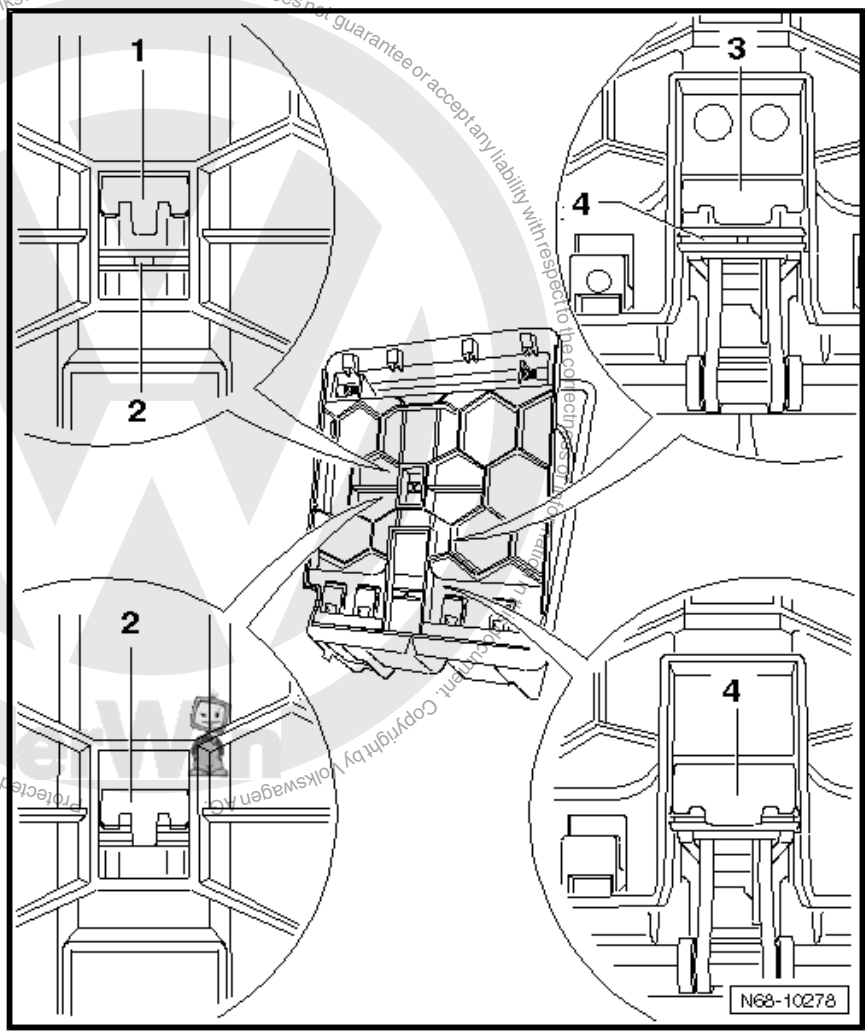

2.9.3 Installing cup holder

– Install in reverse order of removal.

2.10 Removing and installing storage compartment/ashtray (Jetta 2005 ▸, Golf Variant 2007 ▸)

2.10.1 Removing

– Switch off ignition.

Vehicles with automatic gearbox

– Release selector lever boot from cover ⇒ Rep. Gr. 37 .

Vehicles with manual or dual clutch gearbox

– Release selector lever boot from cover ⇒ Rep. Gr. 34 .

Downloaded from www.Manualslib.com manuals search engine

– Remove the two bolts -1- (1.5 Nm).
– Release storage compartments -2- from centre console and disconnect wiring harness (dependent on vehicle equipment).

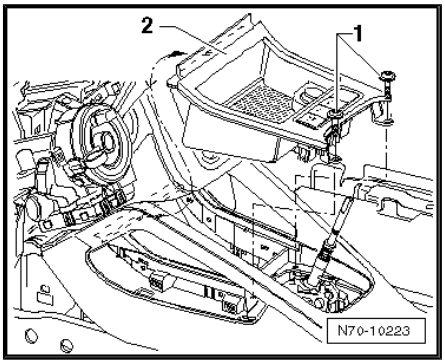

Note

An ashtray may be installed instead of a storage compartment, but the removal is identical.

2.10.2 Installing

– Install in reverse order of removal.

2.11 Removing and installing storage compartment/ashtray (Jetta 2010 ▸, Golf Variant 2010 ▸)

2.11.1 Removing

– Switch off ignition.

Vehicles with automatic gearbox

– Release selector lever boot from cover ⇒ Rep. Gr. 37 .

Vehicles with manual or dual clutch gearbox

– Release selector lever boot from cover ⇒ Rep. Gr. 34 .

All vehicles

– Remove the two bolts -1- (1.5 Nm).
– Release ashtray unit -2- from centre console and disconnect wiring harness (dependent on vehicle equipment).

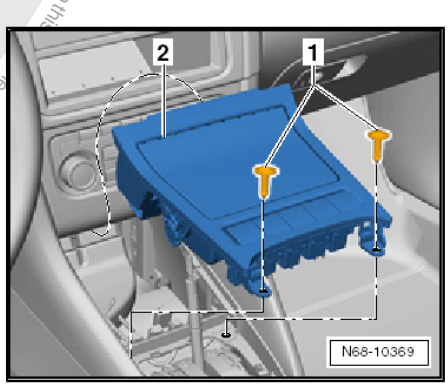

Note

A storage compartment may be installed instead of an ashtray, but removal is identical.

2.11.2 Installing

– Install in reverse order of removal.

Protected by copyright. Copyright for private or commercial purposes, in part or in whole, is not permitted unless authorised by Volkswagen AG. Volkswagen AG does not guarantee or accept any liability with respect to the correctness of information in this document. Copyright by Volkswagen AG.

Downloaded from www.Manualslib.com manuals search engine

2.12 Removing and installing dash panel centre vents (vehicles with no Climatronic) (Jetta 2005 ▸, Golf Variant 2007 ▸)

Volkswagen AG. Volkswagen AG does not guarantee or accept any liability with respect to the correctness of information in this document. Copyright by Volkswagen AG. Protected by copyright. Copying for private or commercial purposes, in part or in whole, is not permitted unless authorised by Volkswagen AG.

Note

For the sake of clarity, the components in the following illustration are shown removed.

2.12.1 Removing

– Remove lining mat -1- from storage compartment.

– Remove the two bolts -2- (1.5 Nm).

– Remove storage compartment -3- from vent -4-.

Vehicles with Climatronic

The items -5-, -6-, -7-, -8- and -9- are exclusively for vehicles with Climatronic.

Downloaded from www.Manualslib.com manuals search engine

Remove dash panel centre vents (vehicles with Climatronic)
⇒ page 43 .

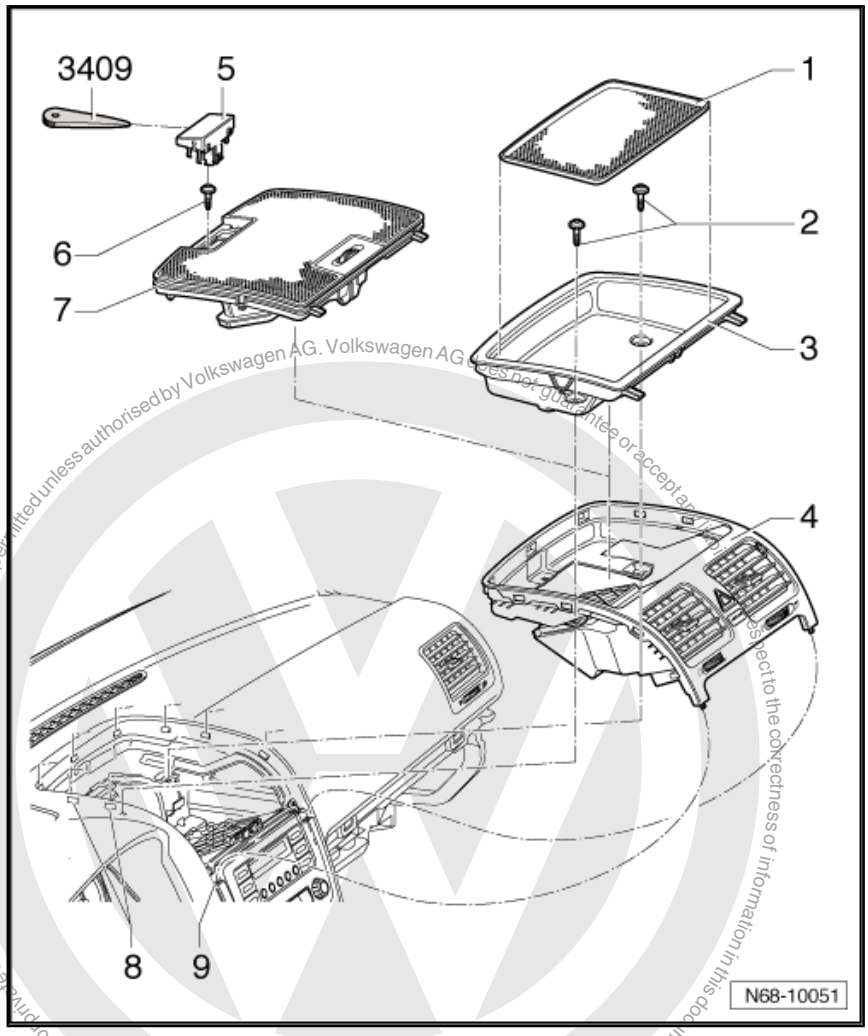

Protected by copyright. Copying for private or commercial purposes, in part or in whole, is not permitted unless authorised by Volkswagen AG. Volkswagen AG does not guarantee or accept any liability with respect to the correctness of information in this document. Copyright by Volkswagen AG.

Note

Vehicles with no Climatronic, two bolts -1- have already been removed at this point.

- Insert two wedges -3409- into lower joint of vent -arrows- and press vent upwards out of mounting in dash panel.
- Operate the respective locking devices and separate the wiring harnesses for hazard warning lights switch and front passenger airbag warning lamp.

Downloaded from www.Manualslib.com manuals search engine

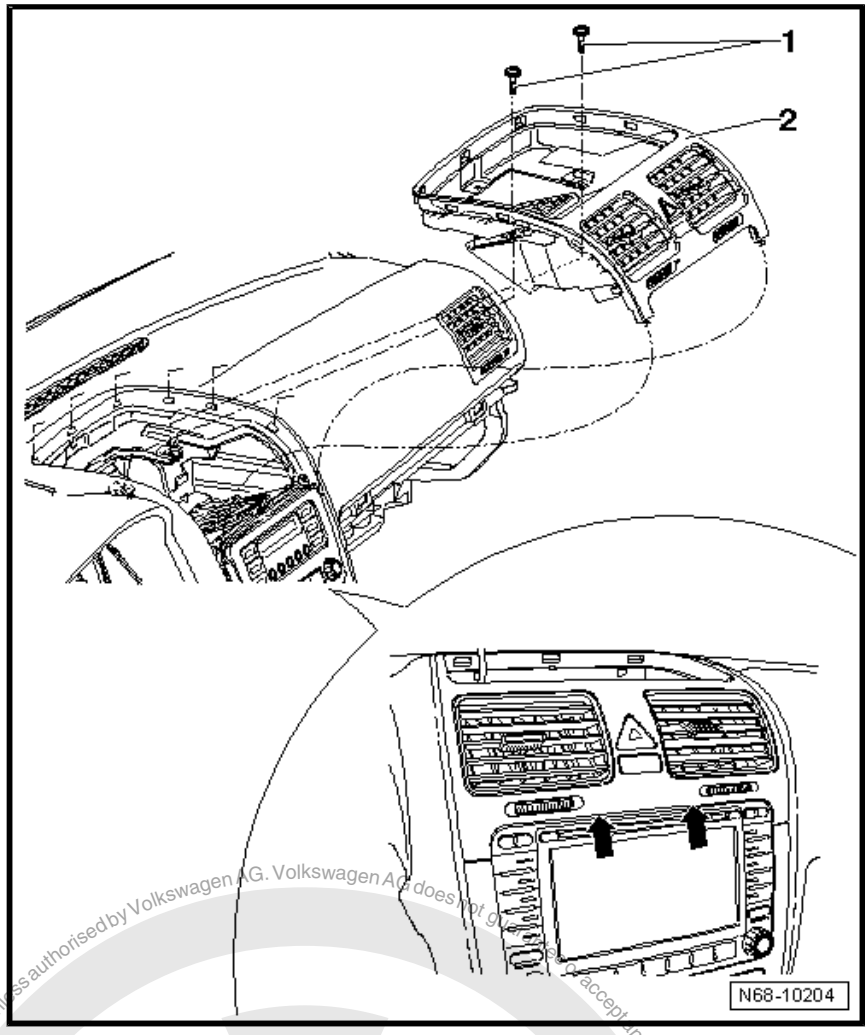

2.12.2 Installing

– Install in reverse order of removal.

2.13 Removing and installing dash panel centre vents (vehicles with Climatronic) (Jetta 2005 ▸, Golf Variant 2007 ▸)

2.13.1 Removing

– Switch off ignition.

Protected by copyright. Copying for private or commercial purposes, in part or in whole, is not permitted unless authorised by Volkswagen AG. Volkswagen AG does not give any guarantee or accept any liability with respect to the correctness of information in this document. Copyright by Volkswagen AG.

Downloaded from www.Manualslib.com manuals search engine

Protected by copyright. Copying for private or commercial purposes, in part or in whole, is not permitted unless authorised by Volkswagen AG. Volkswagen AG does not guarantee or accept any liability with respect to the correctness of information in this document. Copyright by Volkswagen AG.

– Using wedge -3409- , lever sun light sensor -1- out of mounting in indirect ventilation system -2-.
– Disconnect wiring harness from photo sensor.
– Remove bolt -3- (1.5 Nm).

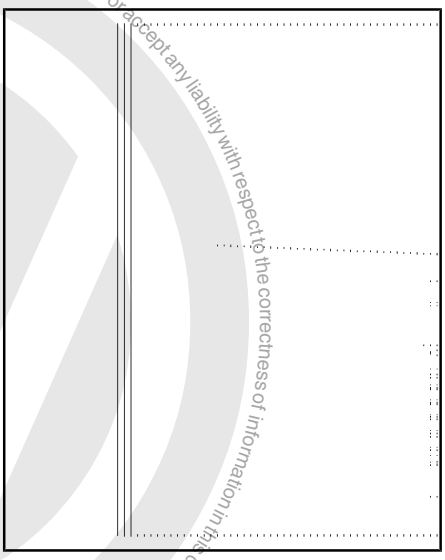

Note

For the sake of clarity, the components in the following illustration are shown removed.

– Insert two wedges -3409- , as shown, into joint between indirect ventilation system -1- and vent -2-.
– Using wedge -3409- press metal clips -3- and -4- to rear and pull indirect ventilation upwards and out of mountings in vent -arrow-.

Downloaded from www.Manualslib.com manuals search engine

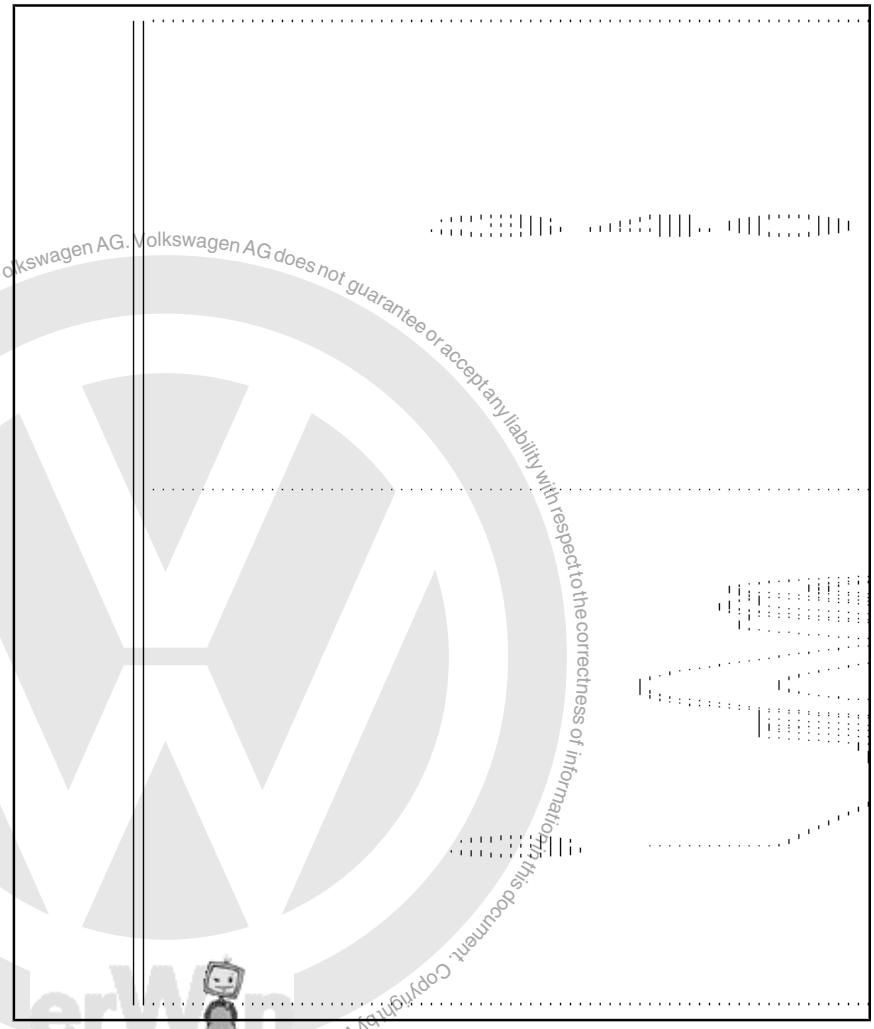

Protected by copyright. Copyright by Volkswagen AG. Volkswagen AG does not guarantee or accept any liability with respect to the correctness of information in this document. Copying for private or commercial purposes, in part or in whole, is not permitted unless authorised by Volkswagen AG.

– Remove the two bolts -1- (1.5 Nm).
– Release vent -2- in forward area from mountings.
– Insert two wedges -3409- into lower joint of vent -arrows- and press vent upwards out of mounting in dash panel.
– Operate the respective locking devices and separate the wiring harnesses for hazard warning lights switch and front passenger airbag warning lamp.

Downloaded from www.Manualslib.com manuals search engine

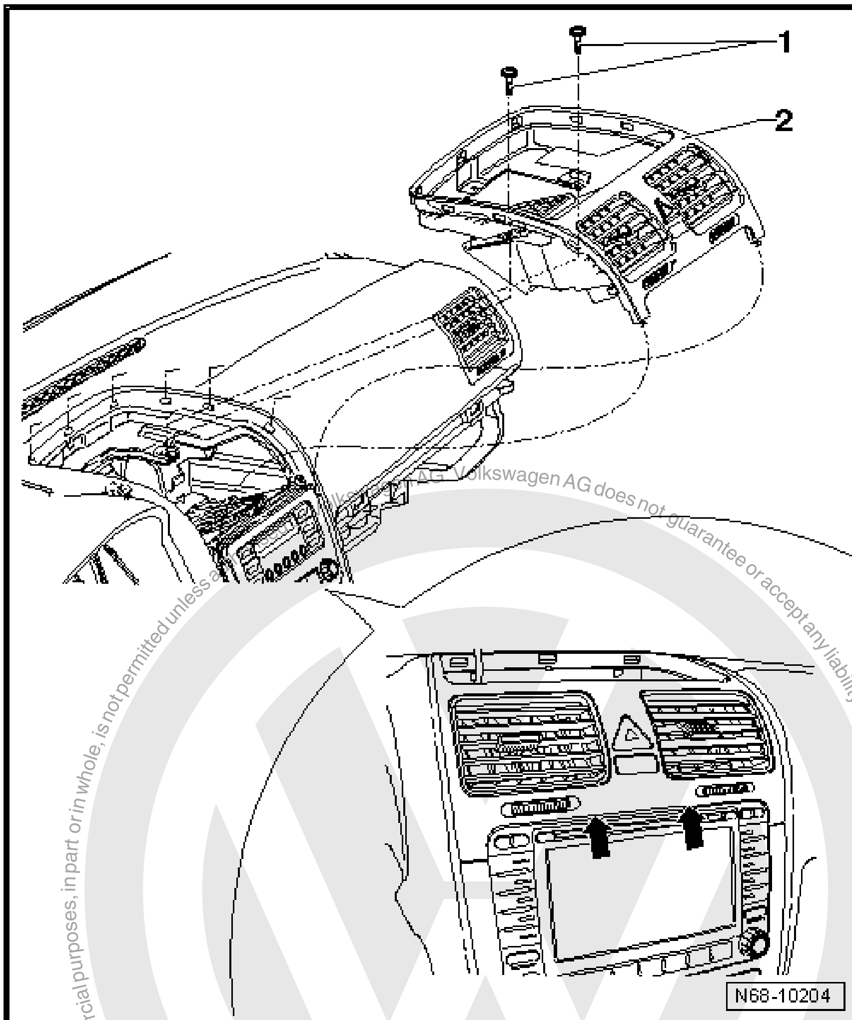

Protected by copyright. Copying for private or commercial purposes, in part or in whole, is not permitted unless authorised by Volkswagen AG. Volkswagen AG does not guarantee or accept any liability with respect to the correctness of information in this document. Copyright by Volkswagen AG.

2.14 Removing and installing centre storage compartment in dash panel (Jetta 2010 ▸, Golf Variant 2010 ▸)

2.14.1 Removing

- Switch off ignition.
- Remove dash panel middle trim (Jetta 2010 ▸, Golf Variant 2010 ▸) ⇒ page 52 .
- If fitted, remove radio ⇒ Communication; Rep. Gr. 91 ; Removing and installing radio and radio navigation system .
- Remove the four bolts -2- (1.5 Nm).
- Pull storage compartment -1- out of dash panel.

Downloaded from www.Manualslib.com manuals search engine

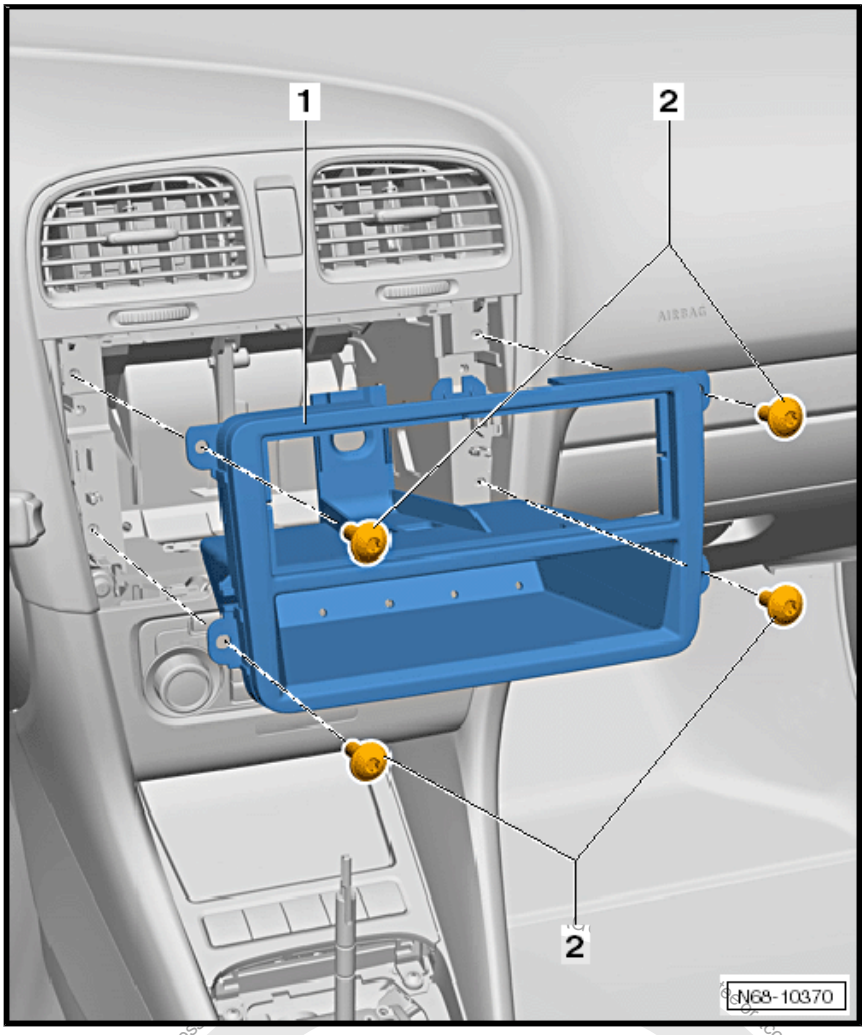

2.14.2 Installing

– Install in reverse order of removal.

2.15 Removing and installing dash panel centre vents (Jetta 2010 ▸, Golf Variant 2010 ▸)

2.15.1 Removing

– Switch off ignition.

– Remove dash panel middle trim (Jetta 2010 ▸, Golf Variant 2010 ▸) ⇒ page 52 .

Vehicles with storage compartment in centre of dash panel

– If fitted, remove radio ⇒ Communication; Rep. Gr. 91 ; Removing and installing radio and radio navigation system .

– Remove dash panel centre storage compartment (Jetta 2010 ▸, Golf Variant 2010 ▸) ⇒ page 48 .

Protected by copyright. Copying for private or commercial purposes, in part or in whole, is not permitted unless ... accept any liability with respect to the correctness of information in this document. Copyright by Volkswagen AG.

Downloaded from www.Manualslib.com manuals search engine

Vehicles with radio navigation system

– Remove radio navigation system ⇒ Communication; Rep. Gr. 91 ; Removing and installing radio and radio navigation system .

All vehicles

– Remove the two bolts -2- (1.5 Nm).

– Using removal wedge -3409- , release the four clips -arrows- and pull out centre vent -1- in dash panel.

– Disconnect wiring to hazard warning light switch -E3- and remove dash panel centre vent.

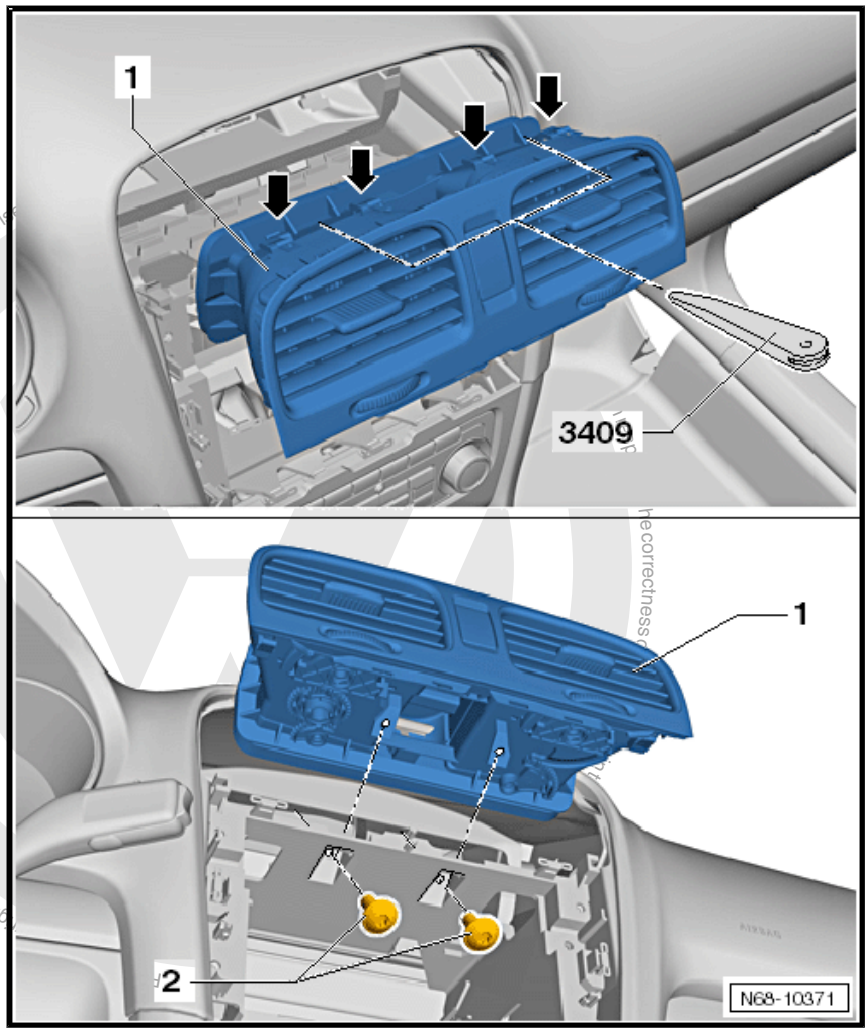

2.15.2 Installing

– Install in reverse order of removal.

Downloaded from www.Manualslib.com manuals search engine

2.16 Removing and installing dash panel middle trim (Jetta 2005 ▸, Golf Variant 2007 ▸)

2.16.1 Removing

– Remove dash panel centre vent.

◆ Vehicles with no Climatronic (Jetta 2005 ▸, Golf Variant 2007 ▸) ⇒ page 43 .

◆ Vehicles with Climatronic (Jetta 2005 ▸, Golf Variant 2007 ▸) ⇒ page 45 .

– Remove the two bolts -1- (1.5 Nm).

– Using removal wedge -3409- prise trim out of fasteners in dash panel (insert wedge close to fastener).

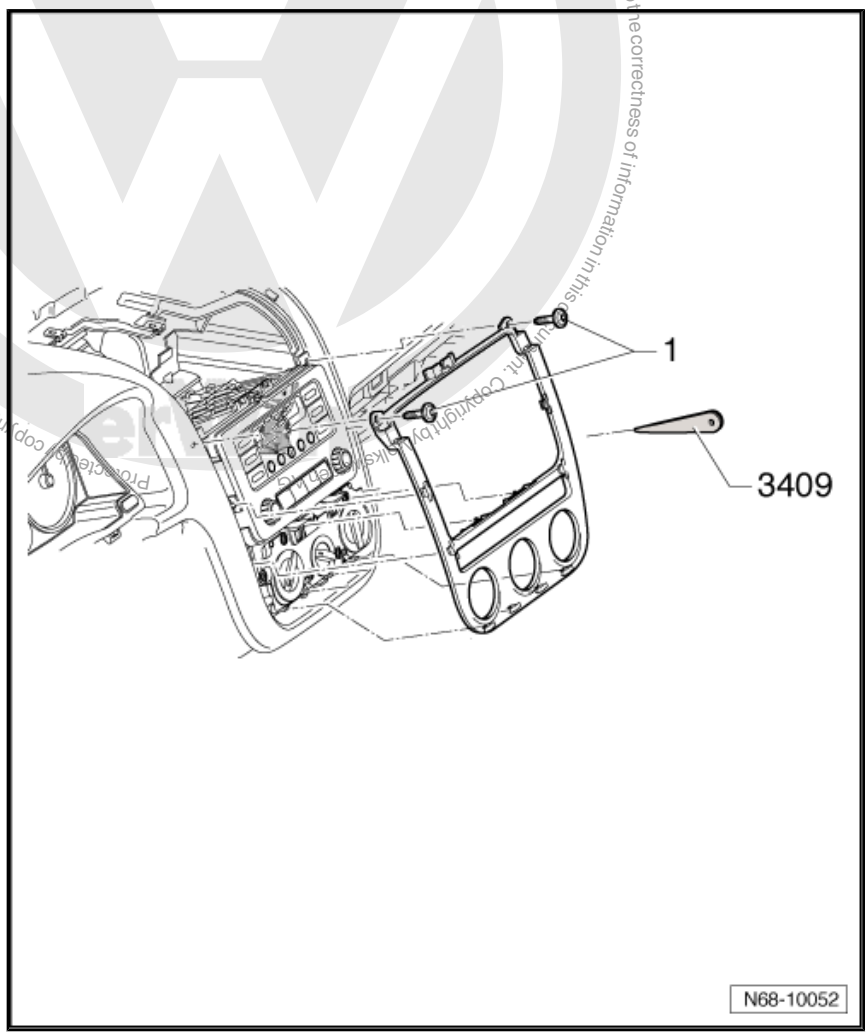

2.16.2 Installing

– Install in reverse order of removal.

Protected by copyright. Copying for private or commercial purposes, in part or in whole, is not permitted unless authorised by Volkswagen AG. Volkswagen AG does not guarantee or accept any liability with respect to the correctness of information in this document. Copyright by Volkswagen AG.

Downloaded from www.Manualslib.com manuals search engine

2.17 Removing and installing dash panel middle trim (Jetta 2010 ▸, Golf Variant 2010 ▸)

2.17.1 Removing

– Using removal wedge -3409- , prise dash panel middle trim out of fasteners in dash panel (insert wedge close to fastener).

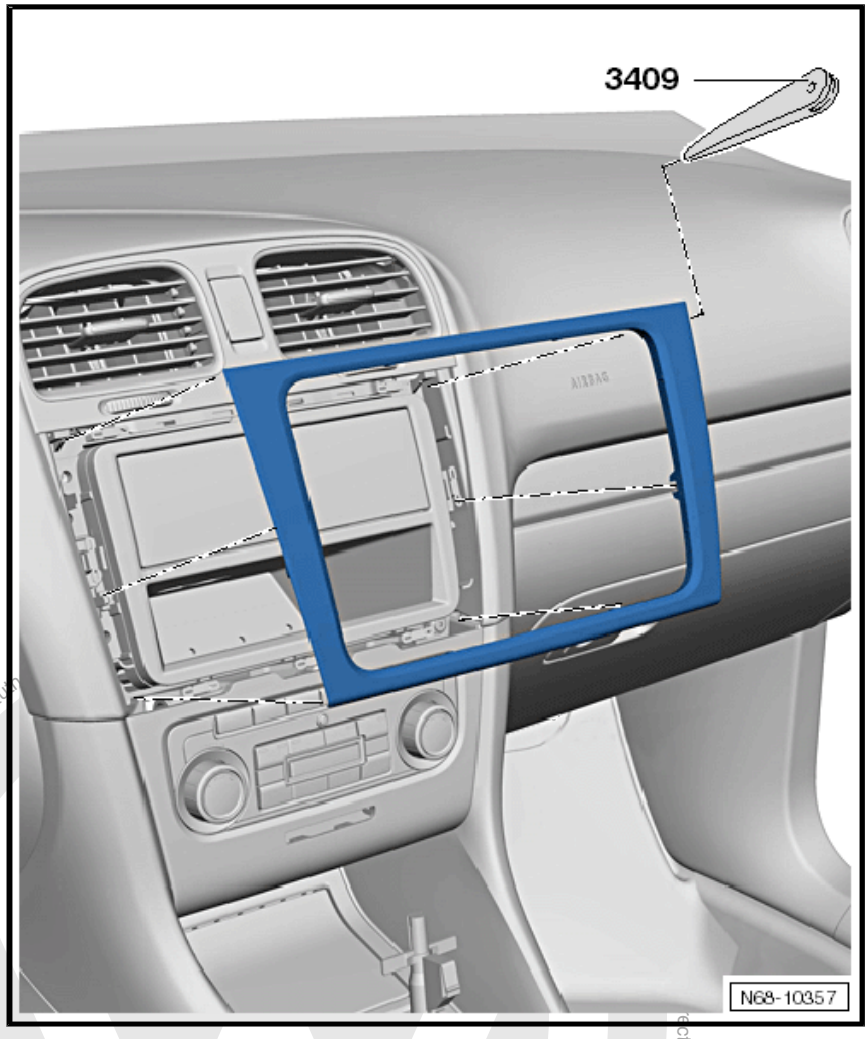

2.17.2 Installing

– Install in reverse order of removal.

Protected by copyright. Copying for private or commercial purposes, in part or in whole, is not permitted unless auth
ectness of information in this document. Copyright by Volkswagen AG.

Downloaded from www.Manualslib.com manuals search engine

2.18 Removing and installing air conditioner controls unit / heater controls unit trim (Jetta 2010 ▸, Golf Variant 2010 ▸)

2.18.1 Removing

– Remove dash panel middle trim (Jetta 2010 ▸, Golf Variant 2010 ▸) ⇒ page 52 .

– Using removal wedge -3409- , prise trim -1- out of fasteners in dash panel (insert wedge close to fastener).

– Disconnect wiring harness to front passenger side airbag de-activated warning lamp -K145- -2- and remove trim.

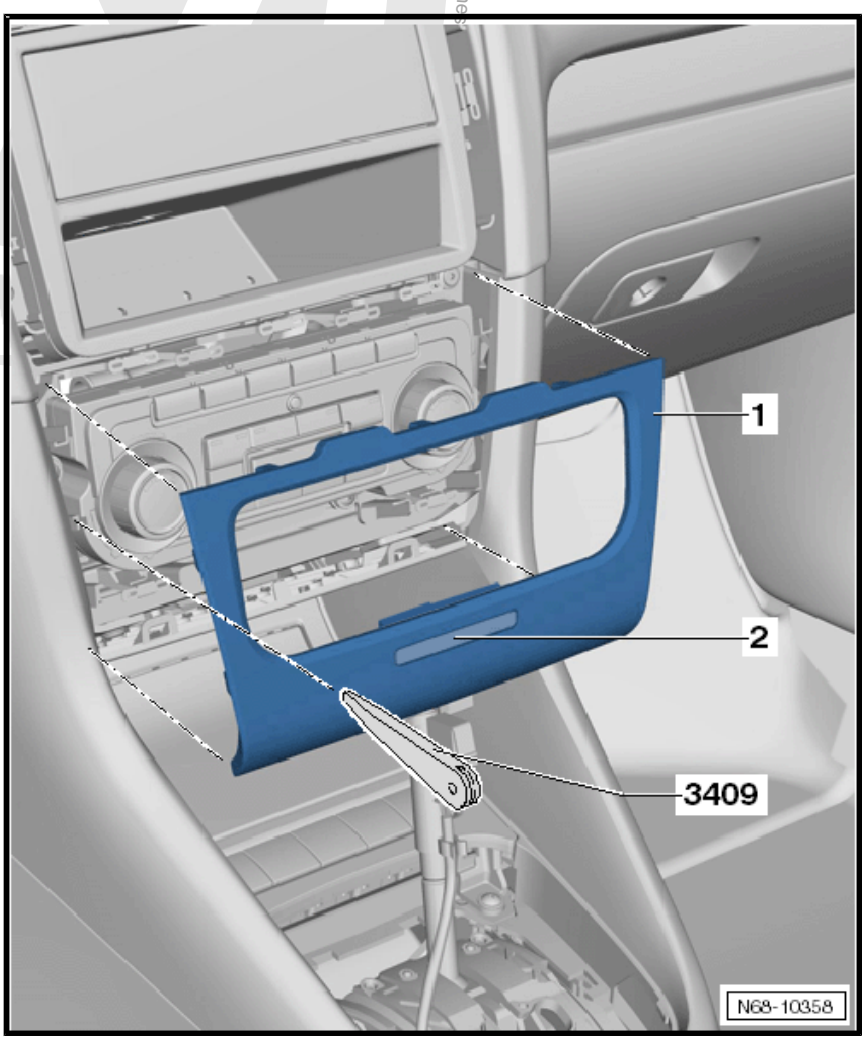

2.18.2 Installing

– Install in reverse order of removal.

Downloaded from www.Manualslib.com manuals search engine

Protected by copyright. Copying for private or commercial purposes, in part or in whole, is not permitted unless authorised by Volkswagen AG. Volkswagen AG does not guarantee or accept any liability with respect to the correctness of information in this document. Copyright by Volkswagen AG.

2.19 Removing and installing dash panel end trims

2.19.1 Removing

– Prise cover on right side of dash panel -1- out of fasteners using removal wedge -3409- .

– Prise cover on left side of dash panel -2- out of fasteners using removal wedge -3409- .

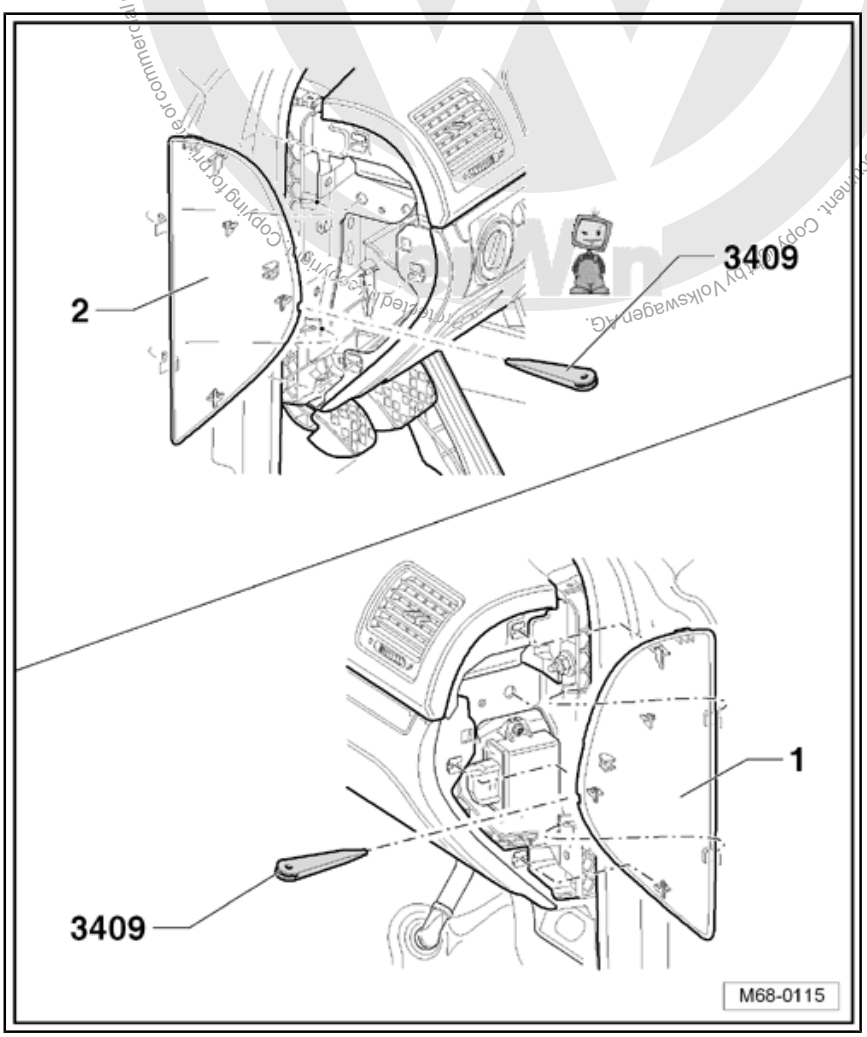

2.19.2 Installing

– Install in reverse order of removal.

Downloaded from www.Manualslib.com manuals search engine

2.20 Removing and installing steering column trim

2.20.1 Removing

Note

For greater clarity the steering wheel is not shown in figure, there is no requirement to remove the steering wheel.

- Release locking lever of steering wheel adjustment.
- Pull steering wheel out and downwards.
- Release gap cover -1- and upper steering column trim -2- from mountings and remove upper steering column trim.
- Remove bolt -3- (1.5 Nm).
- Remove the two bolts -4- (1.5 Nm). Turn steering wheel to gain access to bolts.
- Release locking lever of steering wheel adjustment.
- Release lower steering column trim -5- from retainers and remove it.

Protected by copyright. Copying for private or commercial purposes, in part or in whole, is not permitted unless authorised by Volkswagen AG. Volkswagen AG does not guarantee or accept any liability with respect to the correctness of information in this document. Copyright by Volkswagen AG.

Downloaded from www.Manualslib.com manuals search engine

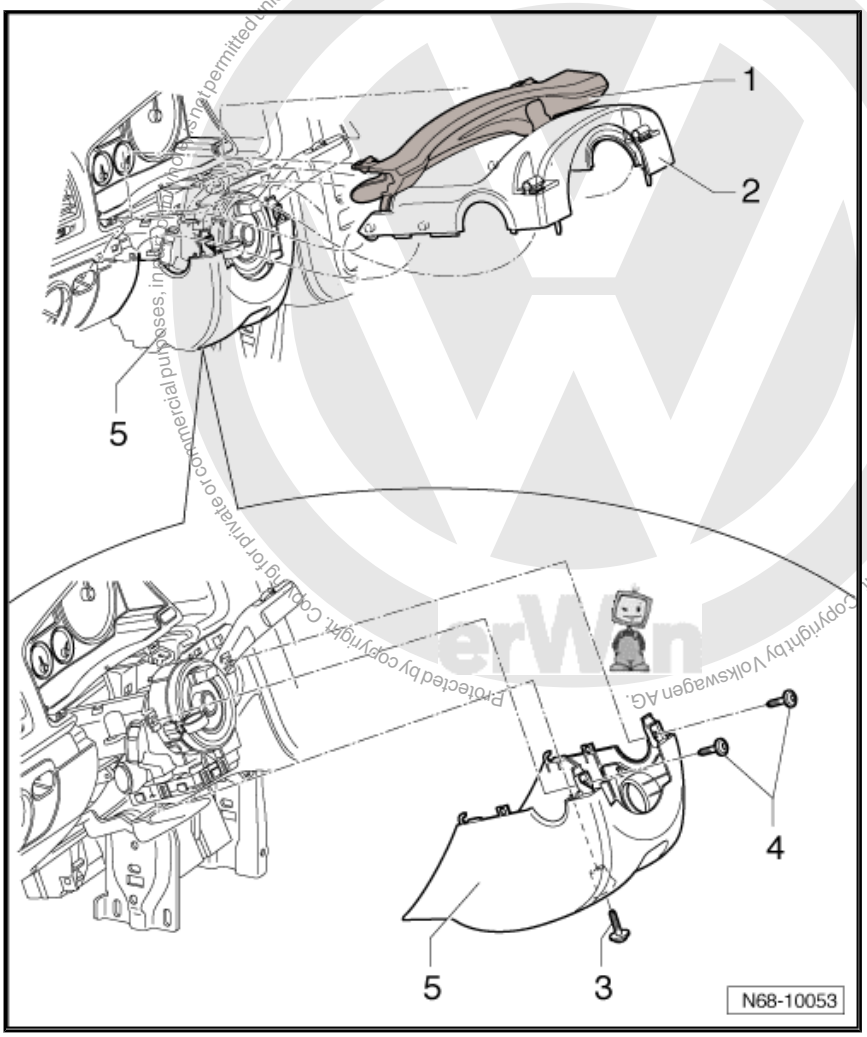

2.20.2 Installing

– Install in reverse order of removal.

2.21 Removing and installing left trim panel on driver side with no storage compartment

2.21.1 Removing

Note

For greater clarity the steering wheel is not shown in figure, there is no requirement to remove the steering wheel.

– Switch off ignition.

– Remove side cover on dash panel on driver side ⇒ page 54 .

– Press light switch forwards, turn it to the right (until it is vertical), then pull it out and disconnect wiring harness.

Downloaded from www.Manualslib.com manuals search engine

– Release steering column gap cover from dash panel ⇒ page 55 . There is no need to remove the complete steering column trim.

Jetta 2010 ▸, Golf Variant 2010 ▸

– Remove dash panel insert ⇒ Electrical system; Rep. Gr. 90 ; Renewing dash panel insert . No need to disconnect wiring harness.

All vehicles

– Remove the two bolts -1- (1.5 Nm).

– Remove the two bolts -2- (1.5 Nm).

– Release trim -3- from dash panel and disconnect wiring harness from headlight range control regulator.

Protected by copyright. Copyright by Volkswagen AG. Volkswagen AG does not guarantee or accept any liability with respect to the correctness of information in this manual. Copying for private or commercial purposes, in part or in whole, is not permitted unless authorised by Volkswagen AG.

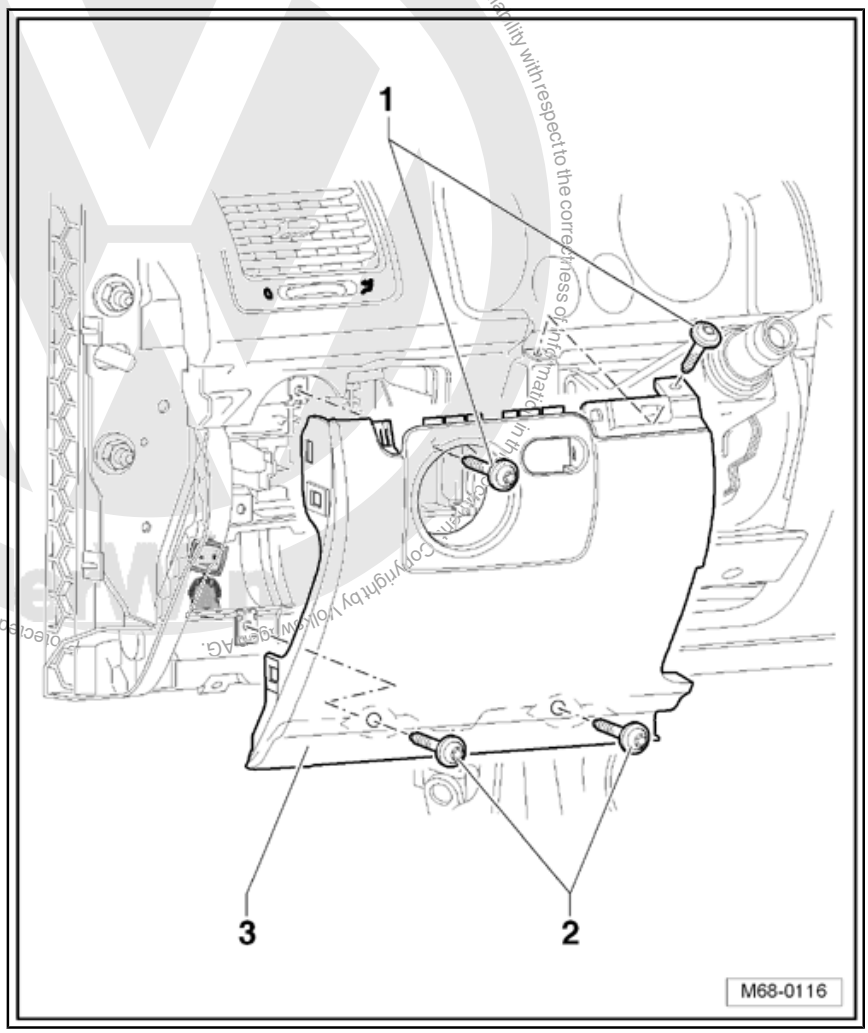

2.21.2 Installing

– Install in reverse order of removal.

Downloaded from www.Manualslib.com manuals search engine

Note

When installing, bolts must be installed in sequence -1- then -2- (1.5 Nm).

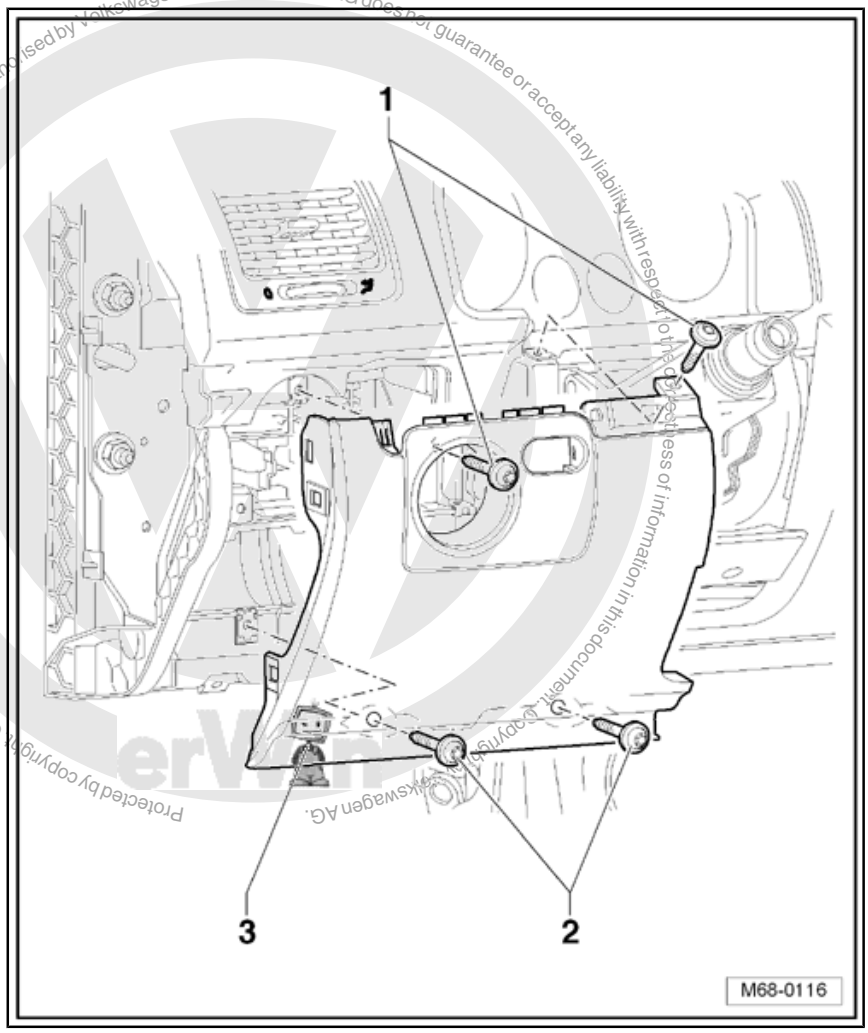

Protected by copyright. Copying for private or commercial purposes, in part or in whole, is not permitted unless authorised by Volkswagen AG. Volkswagen AG does not guarantee or accept any liability with respect to the correctness of information in this document. Copyright by Volkswagen AG.

2.22 Removing and installing left trim panel on driver side with storage compartment

2.22.1 Removing

Note

For greater clarity the steering wheel is not shown in figure, there is no requirement to remove the steering wheel.

– Switch off ignition.

– Remove side cover on dash panel on driver side ⇒ page 54 .

Downloaded from www.Manualslib.com manuals search engine

– Press light switch forwards, turn it to the right (until it is vertical), then pull it out and disconnect wiring harness.

– Release steering column gap cover from dash panel ⇒ page 55 . There is no need to remove the complete steering column trim.

Jetta 2010 ▸, Golf Variant 2010 ▸

– Remove dash panel insert ⇒ Electrical system; Rep. Gr. 90 ; Renewing dash panel insert . No need to disconnect wiring harness.

All vehicles

– Pull storage compartment -1- out of mountings.

– Remove the two bolts -2- (1.5 Nm).

– Remove the two bolts -3- (1.5 Nm).

– Remove bolt -4- (1.5 Nm).

– Release trim from dash panel and disconnect wiring harness from headlight range control regulator.

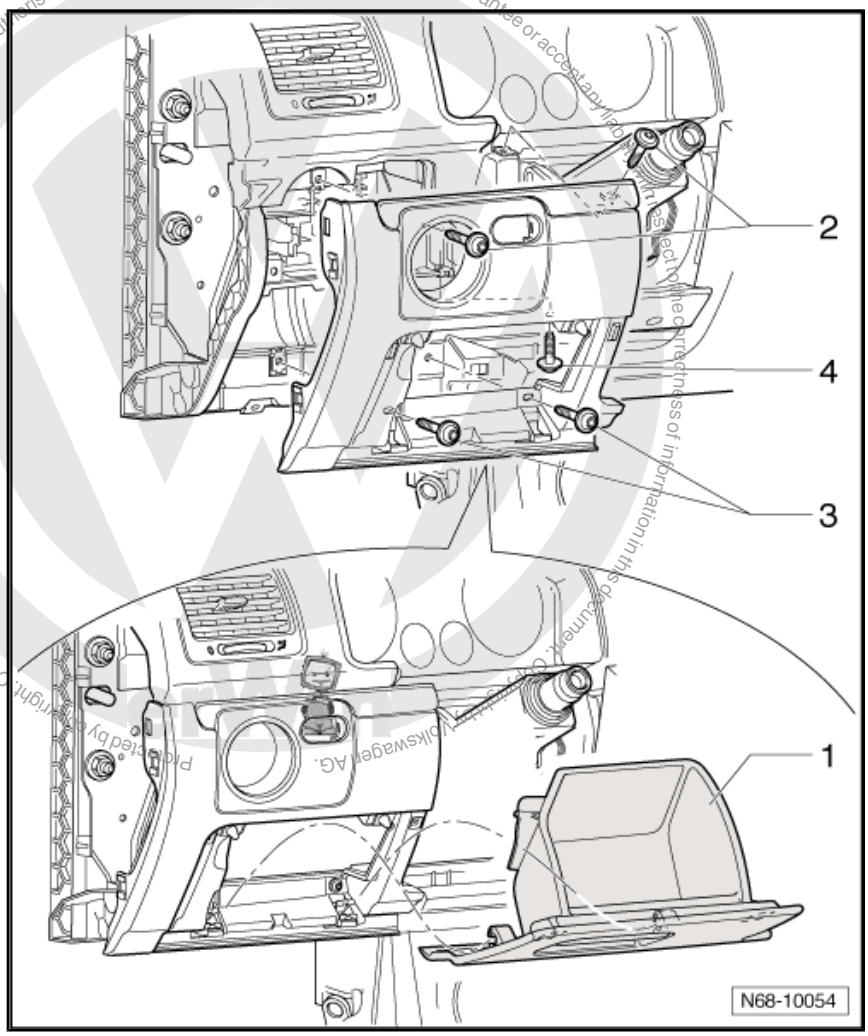

Protected by copyright. Copying for private or commercial purposes, in part or in whole, is not permitted unless authorised by Volkswagen AG. Volkswagen AG does not guarantee or accept any liability with respect to the correctness of information in this document. Copyright by Volkswagen AG.

Downloaded from www.Manualslib.com manuals search engine

2.22.2 Installing

– Install in reverse order of removal.

Note

When installing, bolts must be installed in sequence -1-, -2-, -3- and -4- (1.5 Nm).

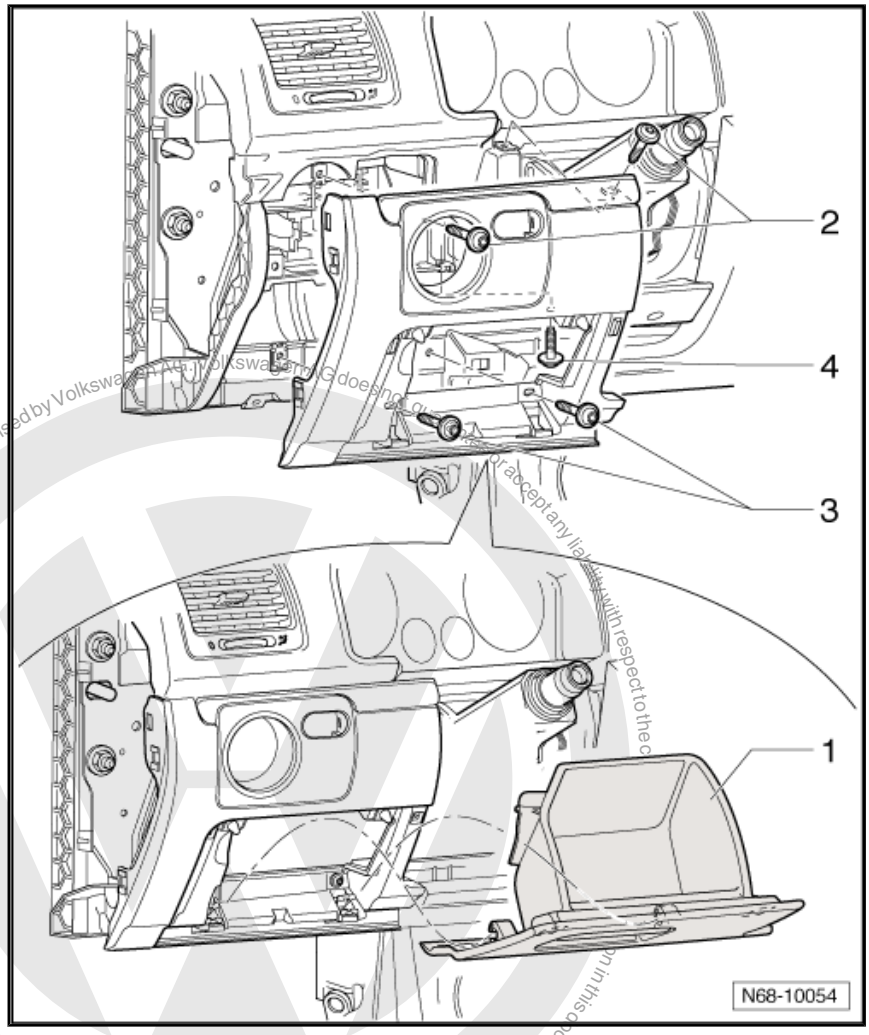

2.23 Removing and installing right trim panel on driver side

2.23.1 Removing

– Switch off ignition.

– Remove side cover on dash panel on driver side ⇒ page 54 .

– Remove left trim on driver side:

♦ With no storage compartment ⇒ page 56

♦ With storage compartment ⇒ page 58

Downloaded from www.Manualslib.com manuals search engine

– Remove centre cover ⇒ page 72 .
– Remove bolts -1-, -2-, -3- and -4- (1.5 Nm).
– Using removal wedge -3409- , release trim from mountings.

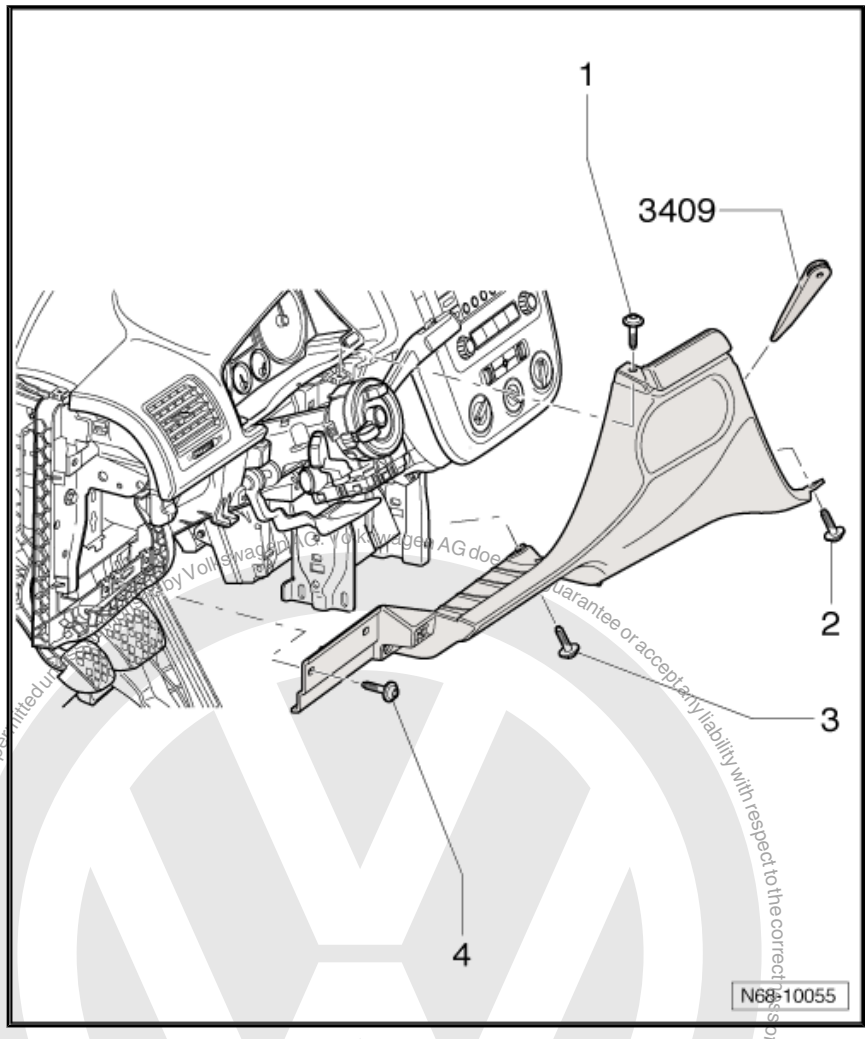

2.23.2 Installing

– Install in reverse order of removal.

Protected by copyright. Copying for private or commercial purposes, in part or in whole, is not permitted unless authorised by Volkswagen AG. Volkswagen AG does not guarantee or accept any liability with respect to the correctness of information in this document. Copyright by Volkswagen AG.

Downloaded from www.Manualslib.com manuals search engine

Note

When installing, bolts must be installed in sequence -1-, -2-, -3- and -4- (1.5 Nm).

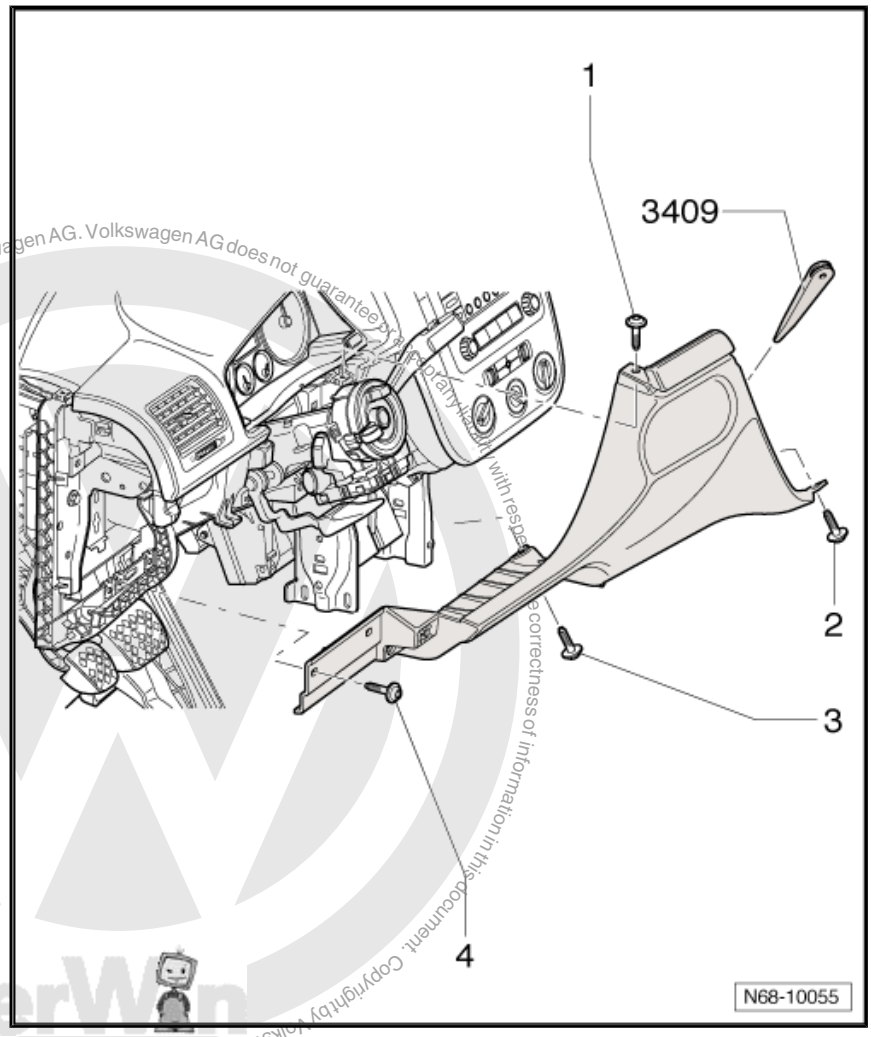

Protected by copyright. Copying for private or commercial purposes, in part or in whole, is not permitted unless authorised by Volkswagen AG. Volkswagen AG does not guarantee or accept any liability with respect to the correctness of information in this document. Copyright by Volkswagen AG.

2.24 Removing and installing glove compartment

2.24.1 Removing

– Switch off ignition.

– Remove dash panel end trim on front passenger side ⇒ page 54 .

– Remove A-pillar middle trim on front passenger side ⇒ page 210

– Remove lower A-pillar trim on front passenger side ⇒ page 212 .

Downloaded from www.Manualslib.com manuals search engine

Jetta 2005 ▸, Golf Variant 2007 ▸

– Remove centre cover (Jetta 2005 ▸, Golf Variant 2007 ▸) ⇒ page 72 .

Jetta 2010 ▸, Golf Variant 2010 ▸

– Remove dash panel middle trim ⇒ page 52 .

– Remove air conditioner controls unit / heater controls unit trim ⇒ page 53 .

– Remove centre cover (Jetta 2010 ▸, Golf Variant 2010 ▸) ⇒ page 72 .

Vehicles with automatic gearbox

– Loosen gearstick boot from cover ⇒ Rep. Gr. 37 .

Vehicles with manual or dual clutch gearbox

– Loosen gearstick boot from cover ⇒ Rep. Gr. 34 .

– Remove storage compartment or ashtray (Jetta 2010 ▸, Golf Variant 2010 ▸) ⇒ page 42 .

– On Golf 2009 ▸, remove two bolts -2- (1.5 Nm).

– Pull centre console cover -1- out in direction of -arrow-.

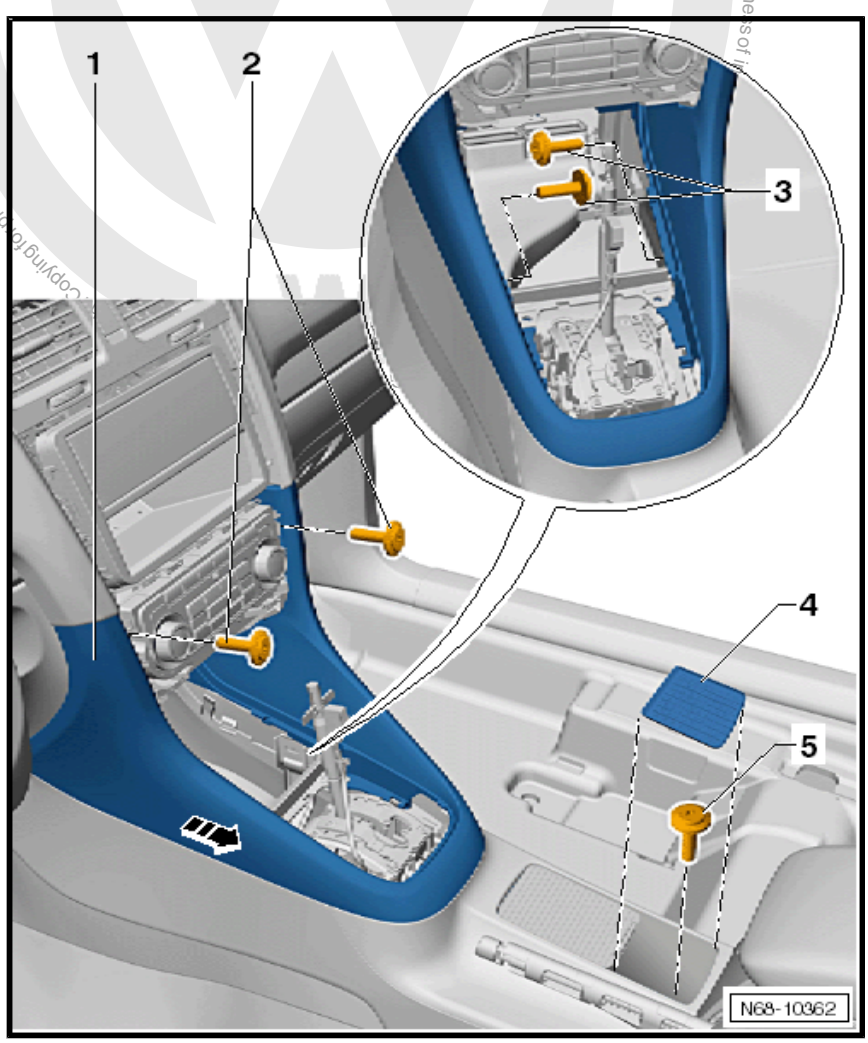

Copying for private or commercial purposes, partially or in whole, is not permitted unless authorised by Volkswagen AG. Volkswagen AG does not guarantee or accept any liability with respect to the correctness of i

Downloaded from www.Manualslib.com manuals search engine

– On vehicles with headlight range control unit -J431- or control unit for cornering light and headlight range control -J745- , remove bolt -1- (1.5 Nm).

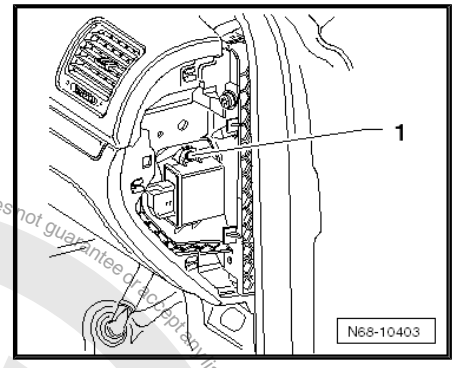

All vehicles

– Remove the seven bolts -1-, -2- and -3- (1.5 Nm).
– Slide glove compartment outwards onto limit stop -arrow A-.
– Release glove compartment -arrow B- from dash panel.
– Disconnect wiring harness from light and contact switch.
– In vehicles equipped with front passenger airbag deactivation, disconnect wiring harness from key switch.
– If vehicle is equipped with glove compartment cooling, disconnect air conditioning duct from glove compartment.
– If vehicle is equipped with a footwell light, disconnect wiring harness from light.

Protected by copyright. Copying for private or commercial purposes, in part or in whole, is not permitted unless authorised by Volkswagen AG. Volkswagen AG does not guarantee or accept any liability with respect to the correctness of information in this document. Copyright by Volkswagen AG.

Downloaded from www.Manualslib.com manuals search engine

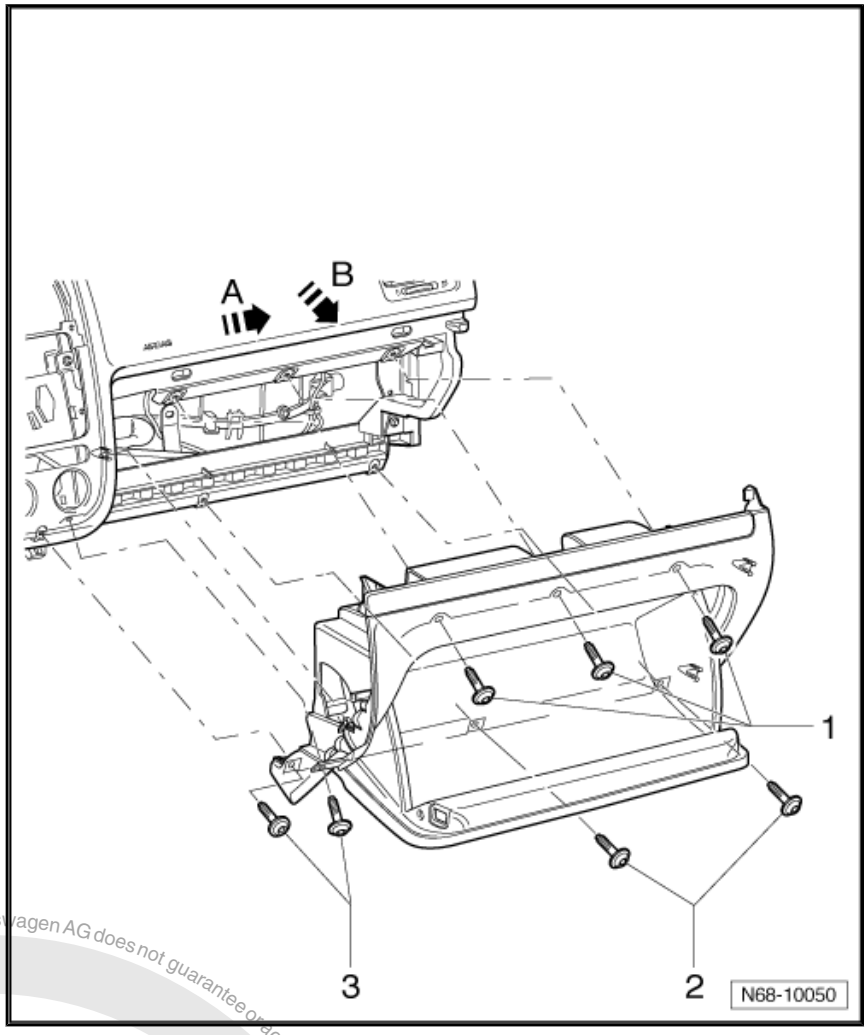

2.24.2 Installing

– Install in reverse order of removal.

2.24.3 Retrofitting cover for storage compartment

The glove compartment for vehicle wallet is not suitable for storing small parts, due to its design. Small parts can be stored in the vehicle wallet compartment if the “cover for storage compartment” is retrofitted.

- Glove compartment removed.

Protected by copyright. Copying for private or commercial purposes, in part or in whole, is not permitted unless authorised by Volkswagen AG. Volkswagen AG does not guarantee or accept any liability with respect to the correctness of information in this document. Copyright by Volkswagen AG.

Downloaded from www.Manualslib.com manuals search engine

– Insert “cover for glove compartment” -1- in rear section of vehicle wallet compartment.

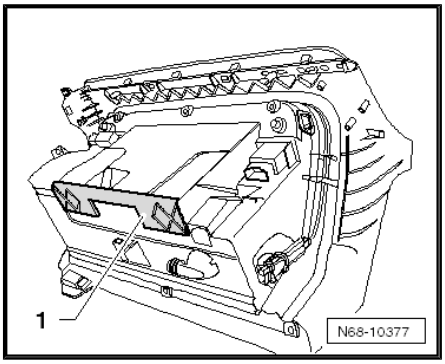

2.25 Removing and installing glove compartment lock cylinder

2.25.1 Removing

– Open glove compartment.

Note

Separate removal of lock cylinder -1- is not possible; release button -2- must be renewed.

Protected by copyright. Copying for private or commercial purposes, in part or in whole, is not permitted unless authorised by Volkswagen AG. Volkswagen AG does not guarantee or accept any liability with respect to the correctness of information in this document. Copyright by Volkswagen AG.

Downloaded from www.Manualslib.com manuals search engine

– Unbolt bolt -3- and pull release button -2- out of glove compartment flap.

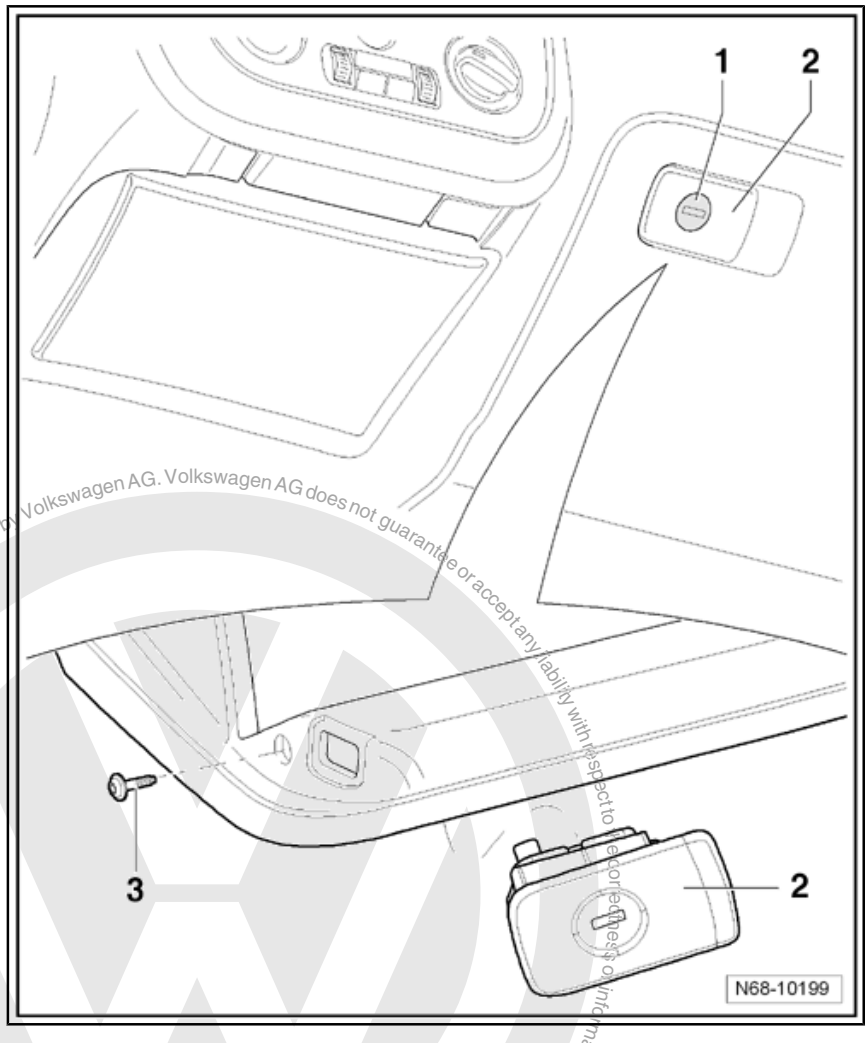

2.25.2 Installing

– Install in reverse order of removal.

2.26 Removing and installing footwell cover on driver side

2.26.1 Removing

– Switch off ignition.

– Remove the two bolts -1- (1.5 Nm).

– Detach cover from fasteners and disconnect wiring harness from footwell light.

– Operate the two locking devices -arrows- and pull diagnostic connector out of cover.

Protected by copyright. Copying for private or commercial purposes, in part or in whole, is not permitted unless authorised by Volkswagen AG. Volkswagen AG does not guarantee or accept any liability with respect to the correctness of information in this document. Copyright by Volkswagen AG.

Downloaded from www.Manualslib.com manuals search engine

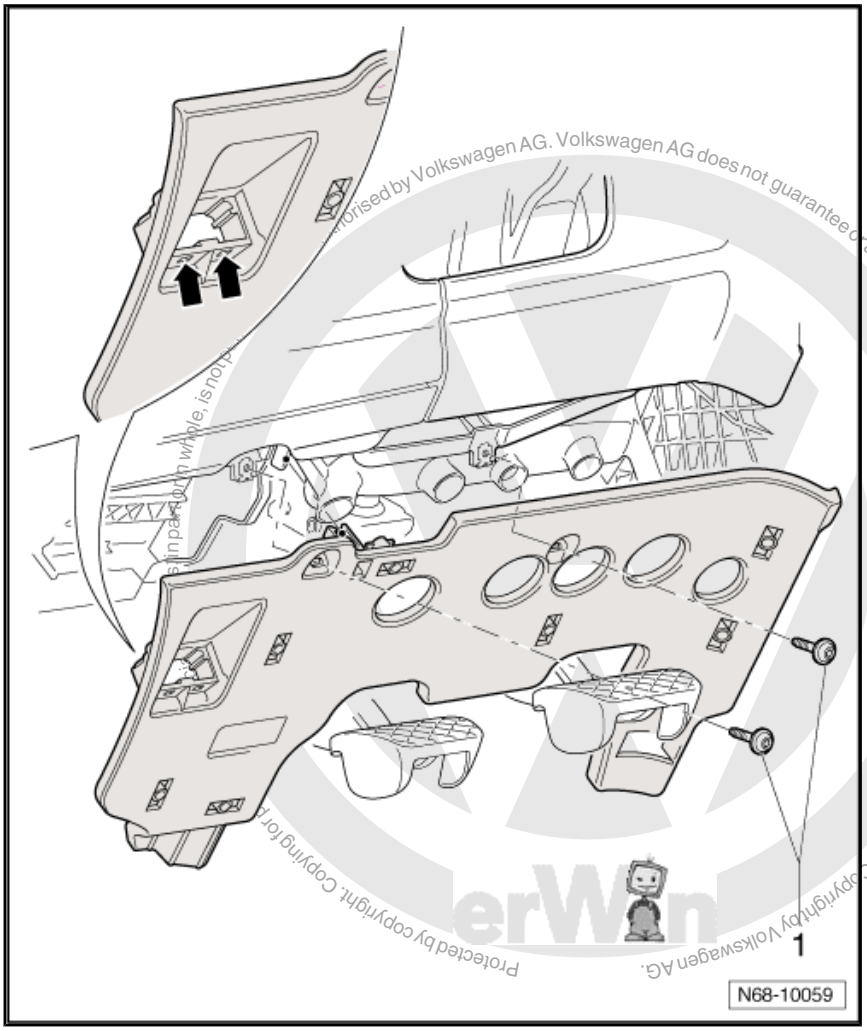

2.26.2 Installing

– Install in reverse order of removal.

2.27 Removing and installing dash panel decorative trims (Jetta 2005 ▸, Golf Variant 2007 ▸)

2.27.1 Removing

– Prise trims -1- and -2- out of dash panel on driver side using removal wedge -3409- .

Downloaded from www.Manualslib.com manuals search engine

– Prise trim -3- out of fasteners on front passenger side using removal wedge -3409- .

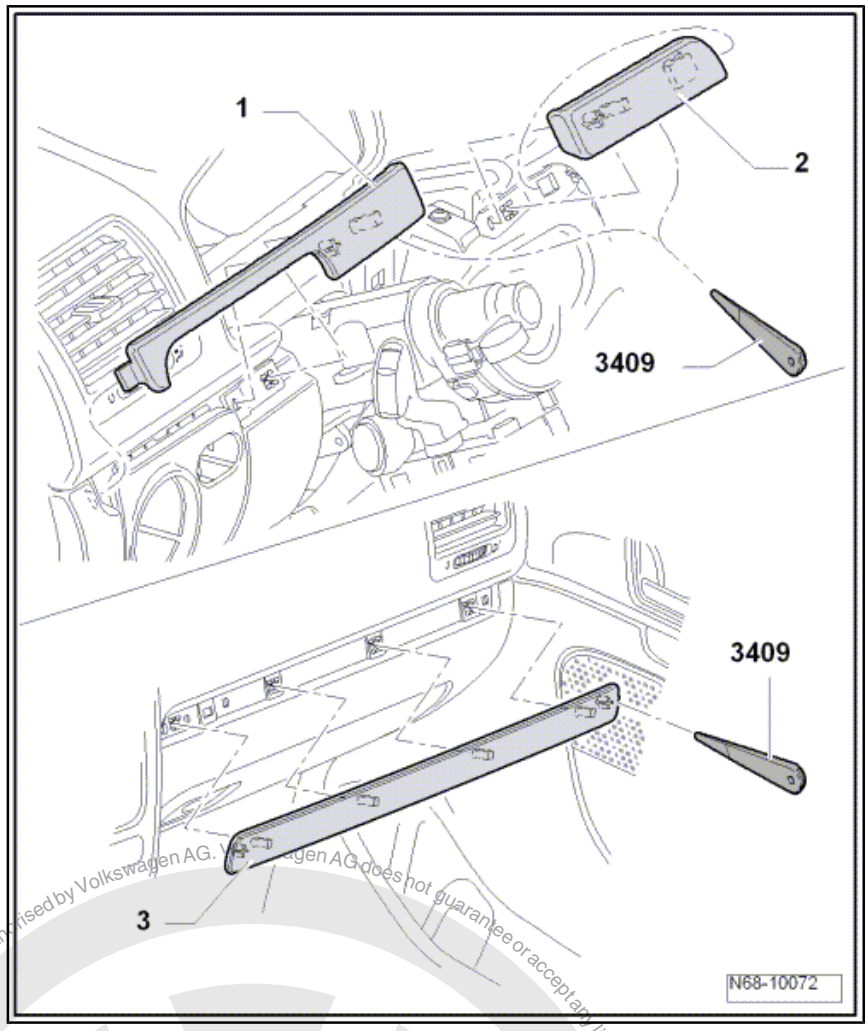

2.27.2 Installing

– Install in reverse order of removal.

2.28 Removing and installing dash panel decorative trims (Jetta 2010 ▸, Golf Variant 2010 ▸)

2.28.1 Removing

Driver side

– Using removal wedge -3409- , lever trims -1- and -2- out of dash panel on driver side.

Passenger side

– Switch off ignition.

– Remove dash panel end trim on front passenger side ⇒ page 54 .

Protected by copyright. Copying for private or commercial purposes, in part or in whole, is not permitted unless authorised by Volkswagen AG. Volkswagen AG does not guarantee or accept any liability with respect to the correctness of information in this document. Copyright by Volkswagen AG.

Downloaded from www.Manualslib.com manuals search engine

– Remove A-pillar middle trim on front passenger side ⇒ page 210 .

– Release sill panel moulding from body in area of overlap to lower A-pillar trim ⇒ page 77 .

– Remove lower A-pillar trim on front passenger side ⇒ page 212 .

– Remove dash panel middle trim (Jetta 2010 ▸, Golf Variant 2010 ▸) ⇒ page 52 .

– Remove air conditioner controls unit / heater controls unit trim (Jetta 2010 ▸, Golf Variant 2010 ▸) ⇒ page 53 .

– Remove centre cover (Jetta 2010 ▸, Golf Variant 2010 ▸) ⇒ page 72 .

Vehicles with automatic gearbox

– Loosen gearstick boot from cover ⇒ Rep. Gr. 37 .

Vehicles with manual or dual clutch gearbox

– Loosen gearstick boot from cover ⇒ Rep. Gr. 34 .

– Remove storage compartment or ashtray (Jetta 2010 ▸, Golf Variant 2010 ▸) ⇒ page 42 .

– Remove centre console cover (no need to dismantle centre console completely):

◆ Basic version ⇒ page 11

◆ Highline version ⇒ page 25

– Remove glove compartment ⇒ page 62 .

– Using removal wedge -3409- , prise trim -4- out of mountings -arrow A- on front passenger side.

Protected by copyright. Copying for private or commercial purposes, in part or in whole, is not permitted unless authorised by Volkswagen AG. Volkswagen AG does not guarantee or accept any liability with respect to the correctness of information in this document. Copyright by Volkswagen AG.

Downloaded from www.Manualslib.com manuals search engine

– Release strap clips -3- and -5- -arrow B- on glove compartment.

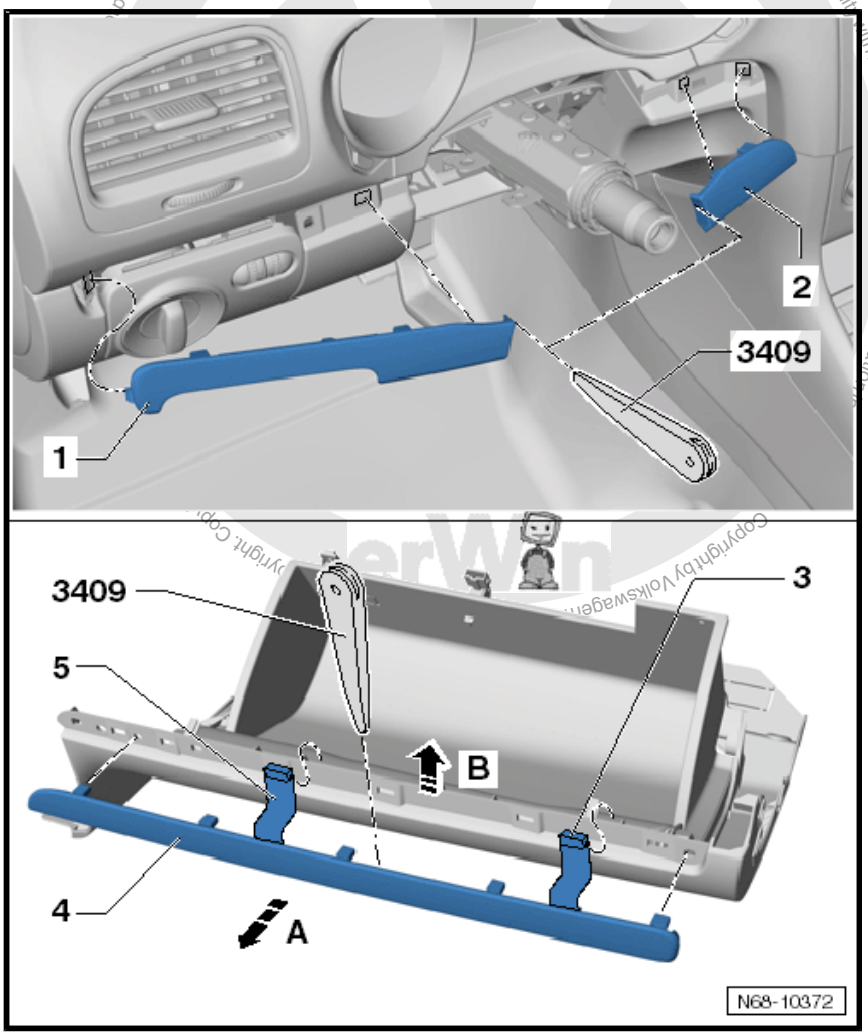

2.28.2 Installing

– Install in reverse order of removal.

Downloaded from www.Manualslib.com manuals search engine

2.29 Removing and installing centre cover (Jetta 2005 ▸, Golf Variant 2007 ▸)

2.29.1 Removing

– Prise cover -1- out of fasteners using removal wedge -3409- .

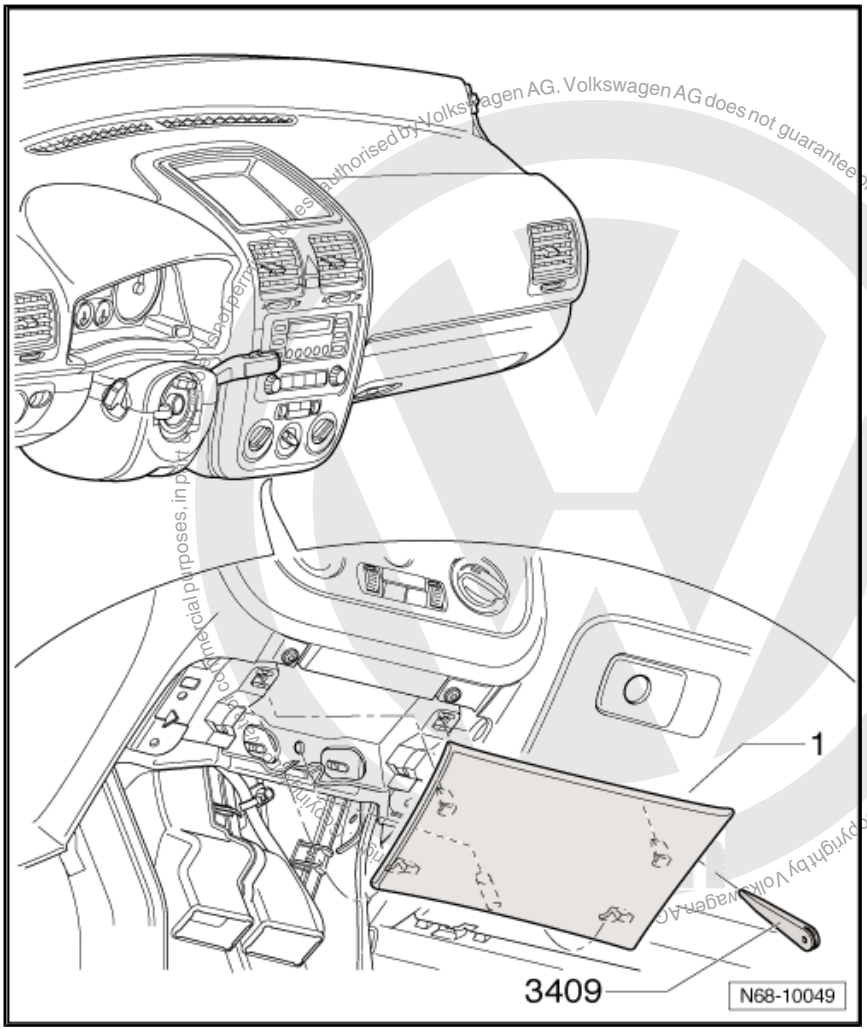

2.29.2 Installing

– Install in reverse order of removal.

2.30 Removing and installing centre cover (Jetta 2010 ▸, Golf Variant 2010 ▸)

2.30.1 Removing

– Remove dash panel middle trim (Jetta 2010 ▸, Golf Variant 2010 ▸) ⇒ page 52 .

– Remove air conditioner controls unit / heater controls unit trim (Jetta 2010 ▸, Golf Variant 2010 ▸) ⇒ page 53 .

Downloaded from www.Manualslib.com manuals search engine

– Using removal wedge -3409- , prise trim out of rear fasteners in dash panel (insert wedge close to fastener).
– Pull trim out of front fasteners, in direction of -arrow-, in dash panel.

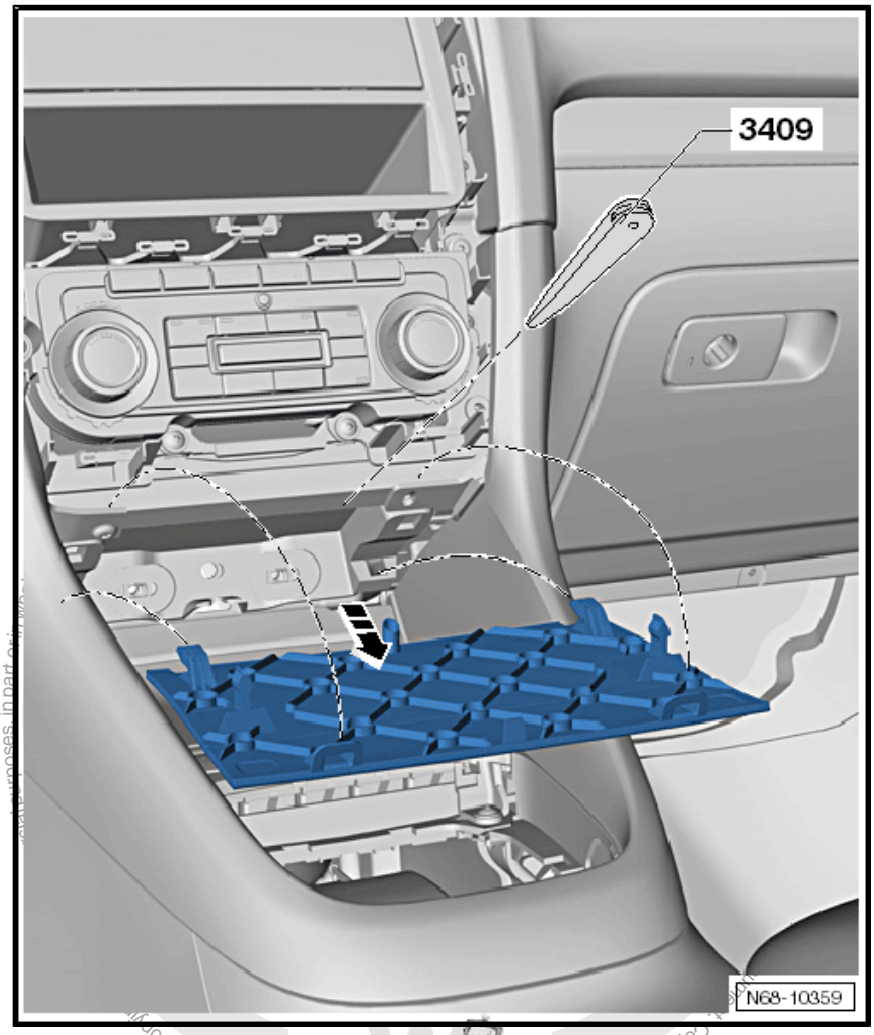

Protected by copyright. Copyright by Volkswagen AG.

2.30.2 Installing

– Install in reverse order of removal.

2.31 Removing and installing sun visor

Note

Removal and installation is described for right side of vehicle.
Follow same instructions for left side as appropriate.

2.31.1 Removing

– Switch off ignition.

Downloaded from www.Manualslib.com manuals search engine

Note

If the sun visor only requires removal then bolt -1- and sun visor bearing -6- need not be removed.

– Using a small screwdriver, open cover caps -1- and -2-.
– Remove bolts -3- and -4- (2 Nm).

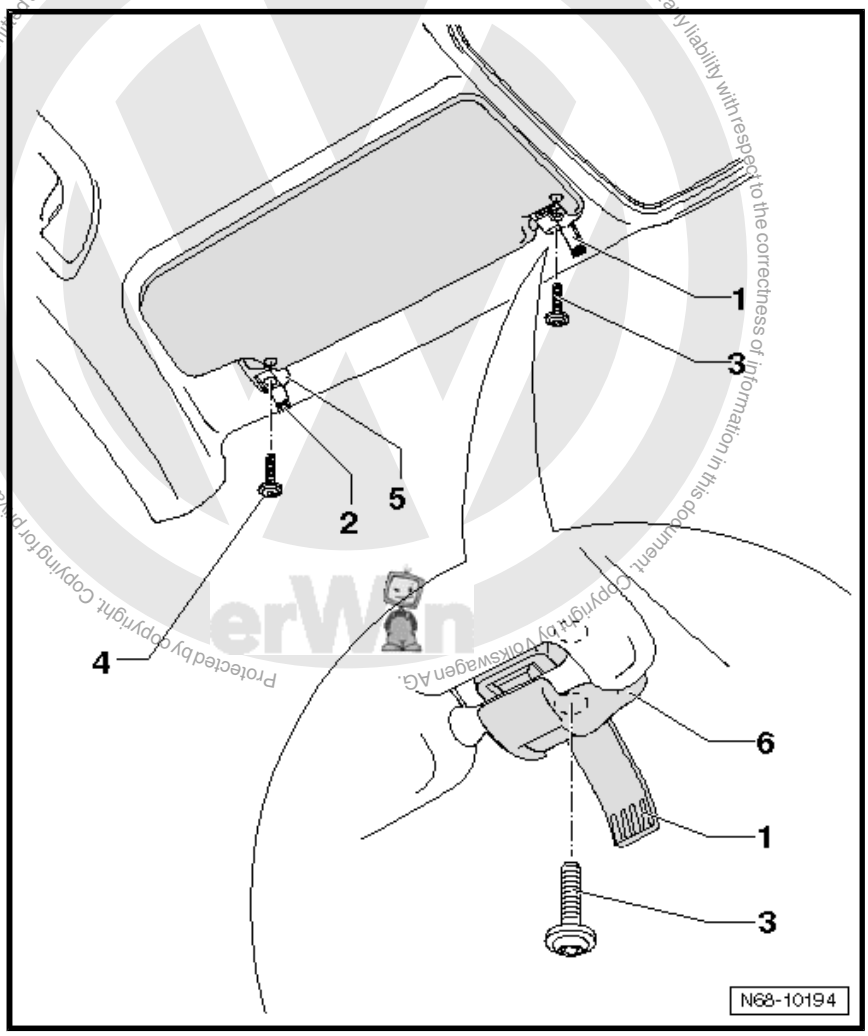

– Carefully pull sun visor bearing -5- out of mounting.

Caution

Hold sun visor. Allowing the sun visor to hang on the wiring harness is not permitted!

– Grasp into opening in moulded headliner for sun visor wiring harness -1- using thumb and index finger as shown.

Downloaded from www.Manualslib.com manuals search engine

Caution

When pulling the connector out of the retaining clip there is a risk of damage to the wiring harness! This occurs if the connector becomes dislodged abruptly from the retaining clip. For this reason, very carefully pull on wiring harness by hand, support palm of hand on vehicle for this. Force applied on wiring harness can be controlled, thus preventing an abrupt separation of wiring connections.

– Hold onto the roof hand rail with one hand and gently pull on the wiring harness (towards windscreen) until the connector slips out of its retaining clip in the moulded headlining.

– Carefully pull connector -1- through opening in moulded headliner. Only pull on connector until it is located taught under the moulded headliner.

Copyright by Volkswagen AG.

Downloaded from www.Manualslib.com manuals search engine

Caution

- *Do not pull connector out any further, as the excess length of flat cable wiring harness -2- is limited and it may tear off.*
- *The flat cable may only be pulled out from the opening in the moulded headliner to a length of 1 cm.*

– Carefully disconnect connector, without pulling on flat cable.

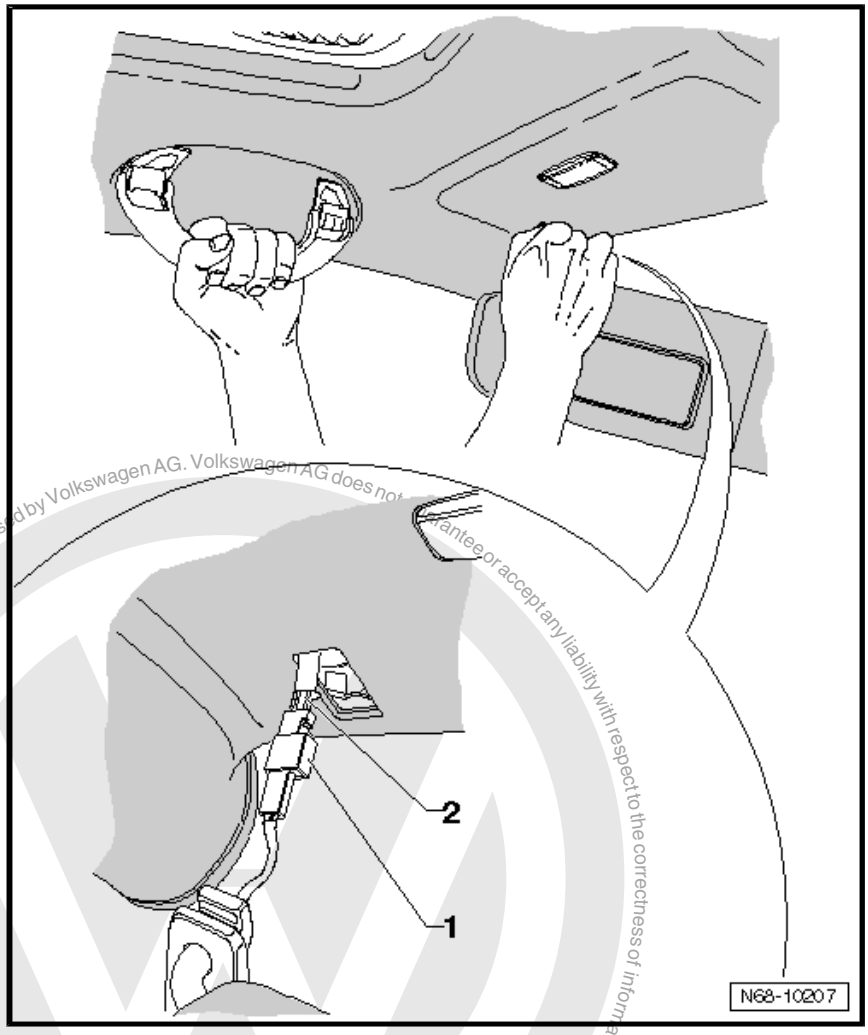

2.31.2 Installing

– Install in reverse order of removal.

Note

When installing the sun visor, a foam tube (part number: -535.971.790-) must be pushed over the connector.

Copyright by Volkswagen AG. Volkswagen AG does not guarantee or accept any liability with respect to the correctness of information in this document. Copyright by Volkswagen AG. Protected by copyright. Copying for private or commercial purposes, in part or in whole, is not permitted unless authorised by Volkswagen AG.

Downloaded from www.Manualslib.com manuals search engine

3 Sill panel mouldings

3.1 Removing and installing sill panel mouldings

Note

Removal and installation are described for the left vehicle side.
Follow same instructions for the right side as appropriate.

3.1.1 Removing

– Remove side padding:

◆ With rear side airbags ⇒ page 287

◆ With no rear side airbags ⇒ page 288

Saloon

– Remove wheel housing liner ⇒ page 78 .

Variant

– Remove wheel housing liner ⇒ page 79 .

All vehicles

– Pull sill panel moulding out of front area of sill and beading of door seal.

– Release guide -1- from lower B-pillar trim.

– Pull sill panel moulding out of rear area of sill and beading of door seal.

– Release guide -2- from lower B-pillar trim.

– Open tab -3- and guide seat belt out through.

Protected by copyright. Copyright by Volkswagen AG. Volkswagen AG does not guarantee or accept any liability with respect to the correctness of information in this document. Copying for private or commercial purposes, in part or in whole, is not permitted unless authorised by Volkswagen AG.

Downloaded from www.Manualslib.com manuals search engine

Note

Before installing, check fasteners for damage and renew if necessary.

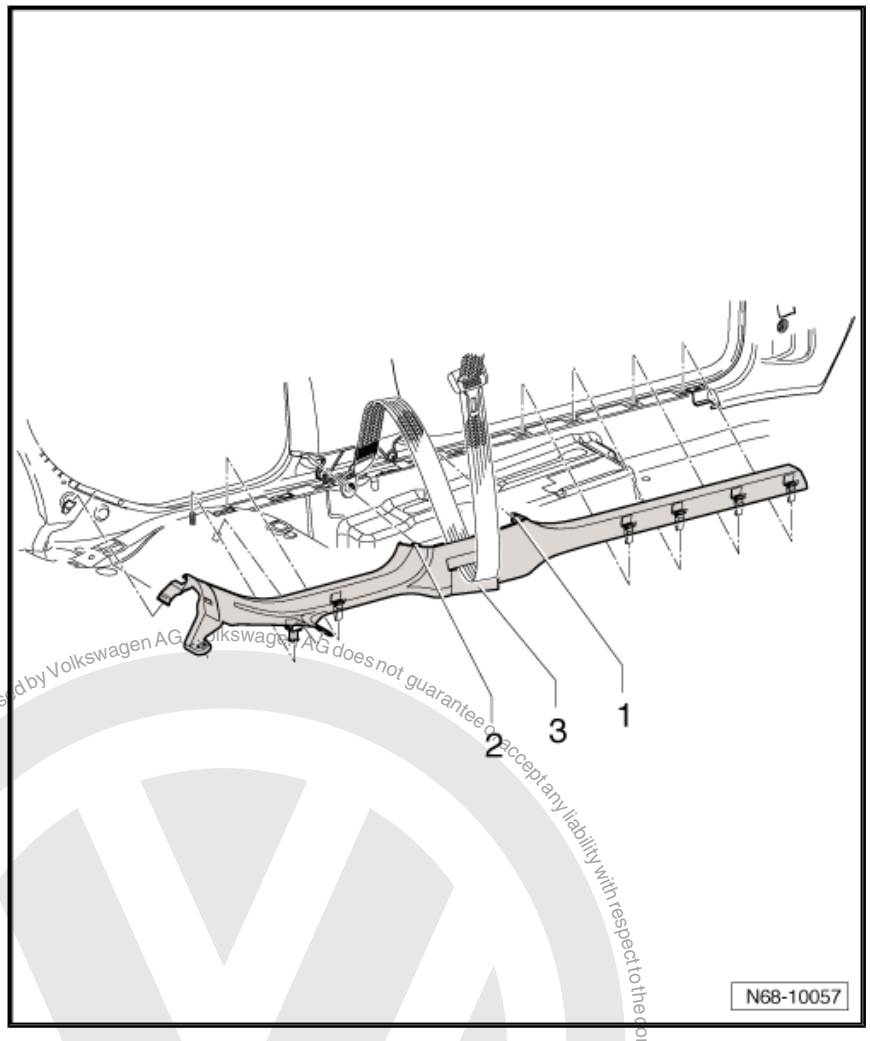

3.1.2 Installing

Install in reverse order of removal.

3.2 Removing and installing wheel housing liner (saloon)

Note

Removal and installation are described for the left vehicle side.
Follow same instructions for the right side as appropriate.

3.2.1 Removing

– Remove bench seat ⇒ page 284 .

– Remove side padding:

Protected by copyright. Copying for private or commercial purposes, in part or in whole, is not permitted unless authorised by Volkswagen AG. Volkswagen AG does not guarantee or accept any liability with respect to the correctness of information in this document. Copyright by Volkswagen AG.

Downloaded from www.Manualslib.com manuals search engine

Protected by copyright. Copying for private or commercial purposes, in part or in whole, is not permitted unless authorised by Volkswagen AG. Volkswagen AG does not guarantee or accept any liability with respect to the correctness of information in this document. Copyright by Volkswagen AG.

- ♦ With rear side airbags ⇒ page 287
- ♦ With no rear side airbags ⇒ page 288
- – Remove the two bolts -1- (1.5 Nm).
- – Release clips -2- from body flange.
- – Pull trim -3- out from beading of door seal -4-.
- – Pull moulding out of fasteners in sill panel moulding -5-.
- – Pull trim out forwards under C-pillar trim.

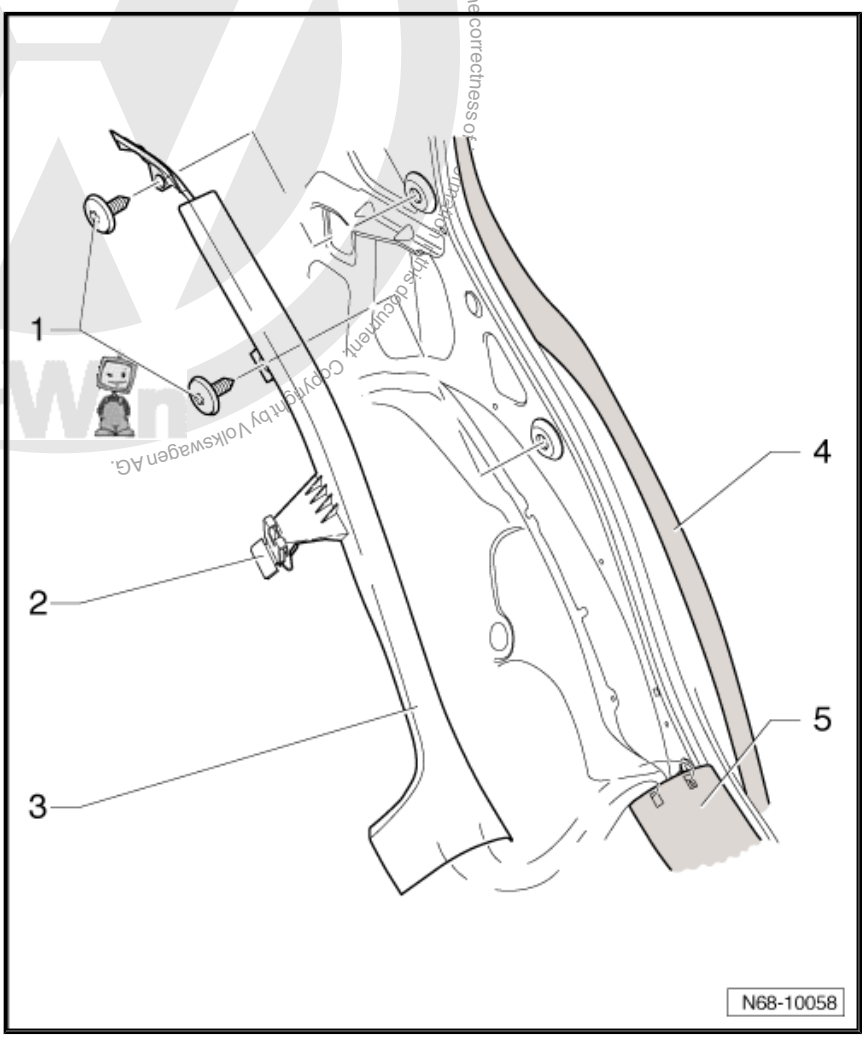

3.2.2 Installing

- – Install in reverse order of removal.

3.3 Removing and installing wheel housing liner (Variant)

Note

Removal and installation are described for the left vehicle side.
Follow same instructions for the right side as appropriate.

Downloaded from www.Manualslib.com manuals search engine

3.3.1 Removing

– Fold bench seat forwards.
– Remove side padding:
♦ With rear side airbags ⇒ page 287
♦ With no rear side airbags ⇒ page 288
– Remove bolt -1- (1.5 Nm).
– Release clips -2- from body flange.
– Pull trim -3- out from beading of door seal -4-.
– Pull moulding out of fasteners in sill panel moulding -5-.
– Pull trim out forwards under C-pillar trim -6-.

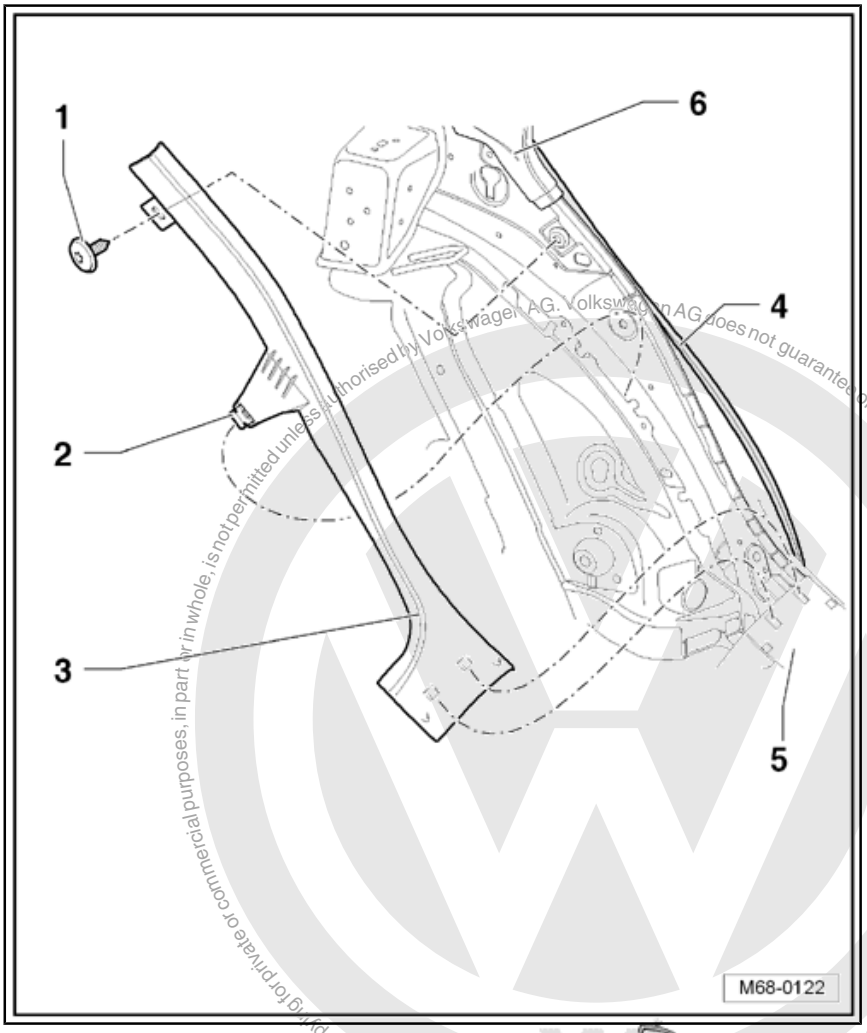

3.3.2 Installing

– Install in reverse order of removal.

Protected by copyright. Copying for private or commercial purposes, in part or in whole, is not permitted unless authorised by Volkswagen AG. Volkswagen AG does not guarantee or accept any liability with respect to the correctness of information in this document. Copyright by Volkswagen AG.

Downloaded from www.Manualslib.com manuals search engine

4 Grab handles

4.1 Removing and installing roof grab handles

Note

The figure shows the front right grab handle, the removal and installation of the remaining grab handles is identical.

4.1.1 Removing

– Fold down grab handle and open the two cover caps -1- and -2- using a small screwdriver.

– Remove the two bolts -3- (2 Nm) and remove grab handle.

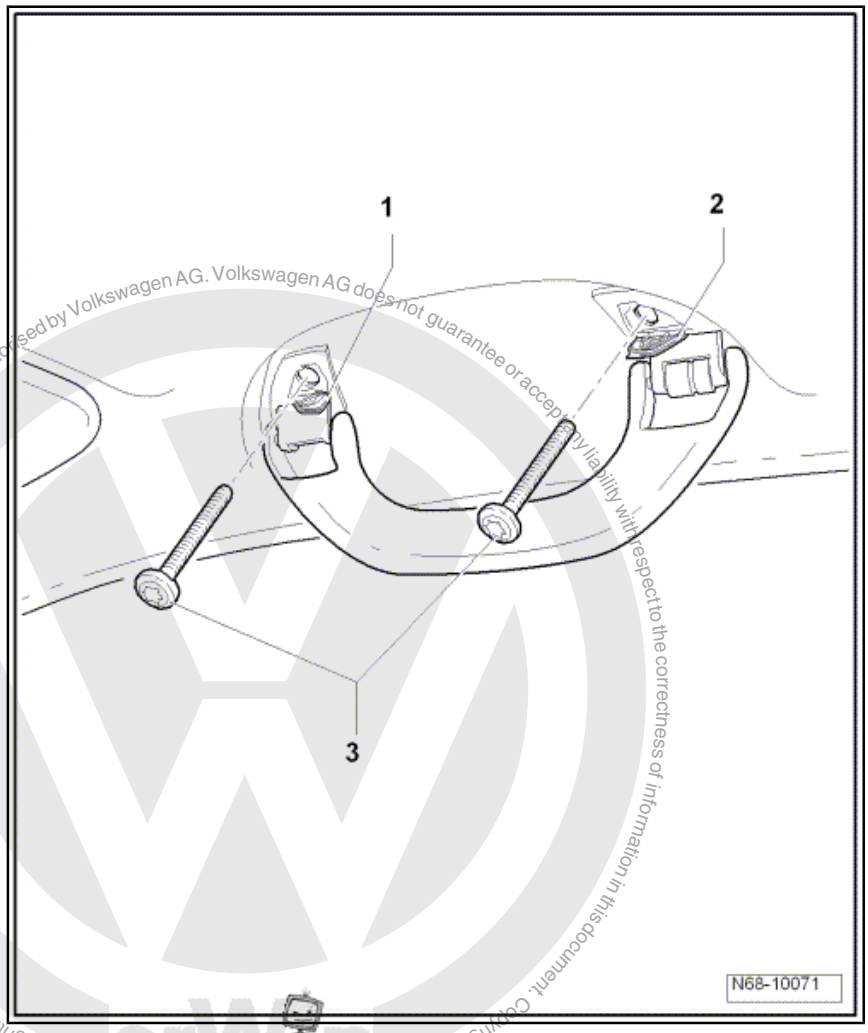

Protected by copyright. Copying for private or commercial purposes, in part or in whole, is not permitted unless authorised by Volkswagen AG. Volkswagen AG does not guarantee or accept any liability with respect to the correctness of information in this document. Copyright by Volkswagen AG.

4.1.2 Installing

– Install in reverse order of removal.

Downloaded from www.Manualslib.com manuals search engine

4.2 Removing and installing roof grab handle bracket

Note

The figure shows the front right grab handle bracket, the removal and installation of the remaining grab handle brackets is identical.

4.2.1 Removing

– Lower moulded headliner.

Saloon

The moulded headliner is not removed from the vehicle, the front seats and front passenger door are not removed ⇒ page 241 .

Variant

The moulded headliner is not removed from the vehicle ⇒ page 245 .

– Remove the two bolts -1- (2 Nm) and remove the bracket -2-.

Allocating installed brackets ⇒ Electronic parts catalogue “ETKA”

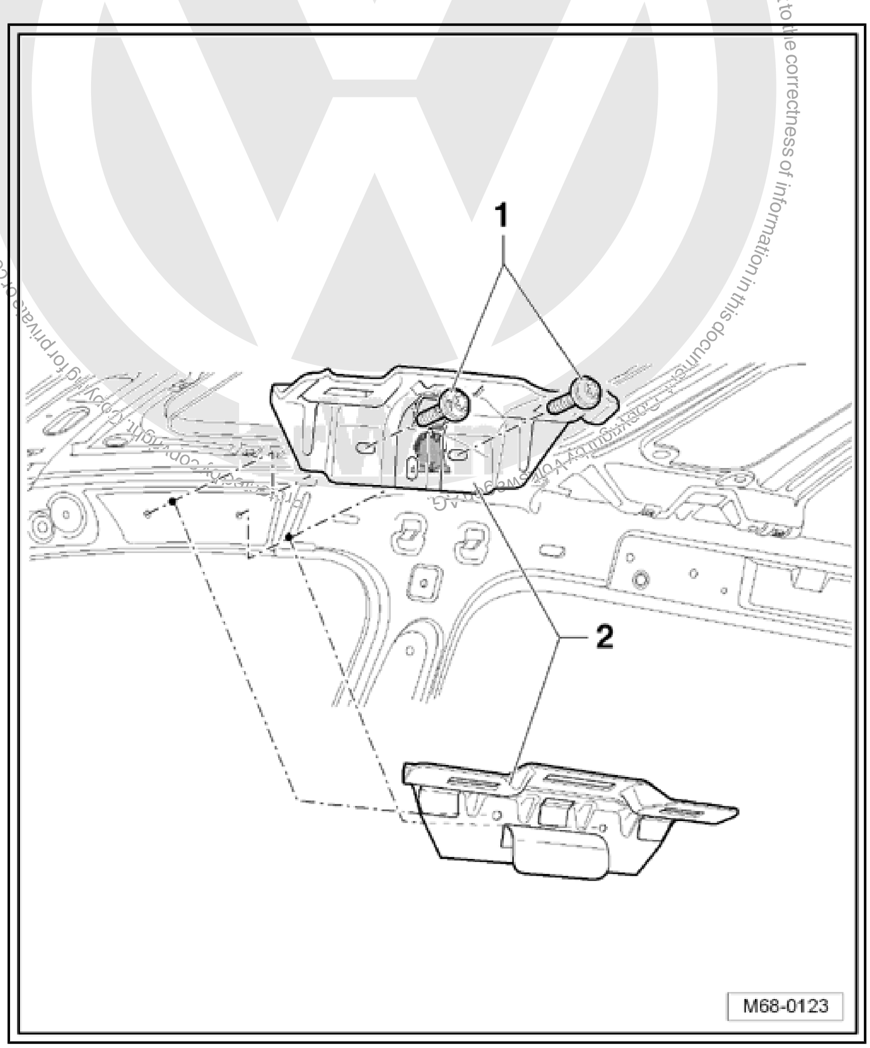

Protected by copyright. Copying for private or commercial purposes, in part or in whole, is not permitted unless authorised by Volkswagen AG. Volkswagen AG does not guarantee or accept any liability with respect to the correctness of information in this document.

Downloaded from www.Manualslib.com manuals search engine

4.2.2 Installing

– Install in reverse order of removal.

Protected by copyright. Copying for private or commercial purposes, in part or in whole, is not permitted unless authorised by Volkswagen AG. Volkswagen AG does not guarantee or accept any liability with respect to the correctness of information in this document. Copyright by Volkswagen AG.

Downloaded from www.Manualslib.com manuals search engine

5 Net partition

5.1 Removing and installing net partition

5.1.1 Removing

– Open rear right door and fold rear seat backrests forward.

– Pull net partition -1- outwards in direction of arrow- and out of mounting -2- in rear right seat backrest.

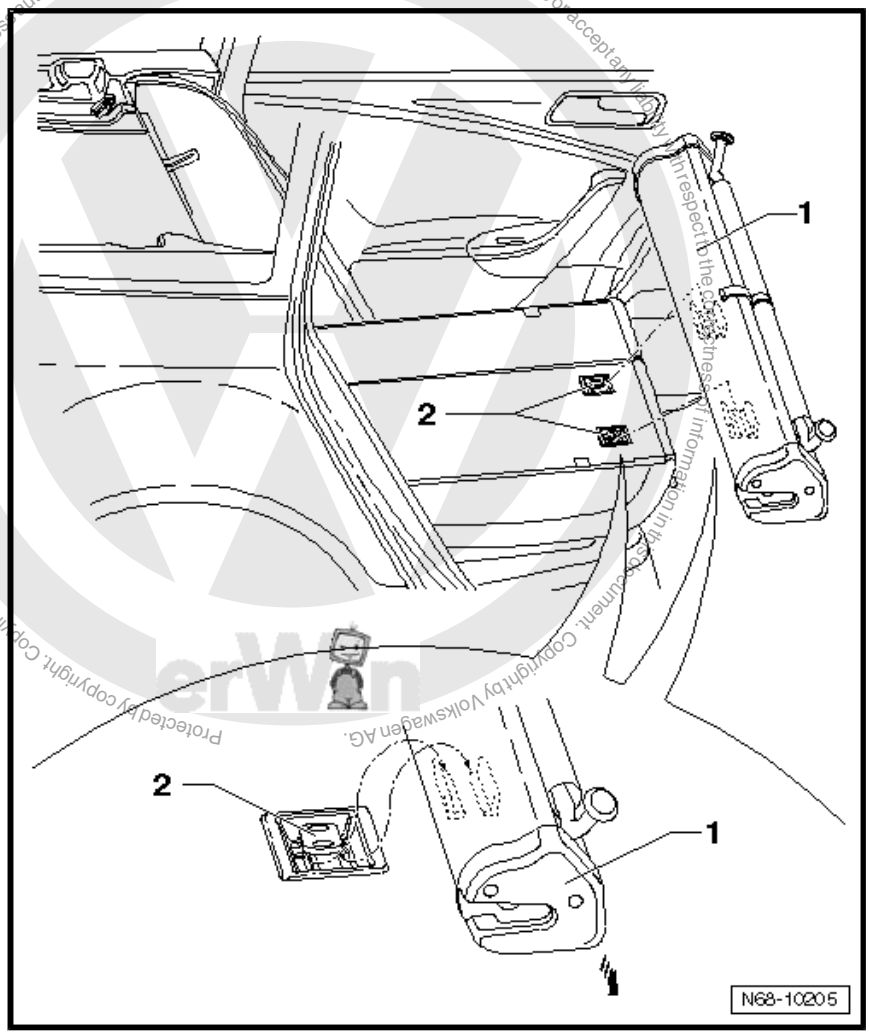

5.1.2 Installing

– Install in reverse order of removal.

Downloaded from www.Manualslib.com manuals search engine

5.2 Removing and installing net partition mountings

1 - Net partition

- ❑ Removing and installing ⇒ page 84

2 - Bolt

- ❑ 8 Nm

3 - Net partition mounting

4 - Mounting

5 - Net partition bracket

6 - Luggage compartment side trim (Variant)

- ❑ Removing and installing ⇒ page 231

7 - Trim collar

8 - Bolt

- ❑ 8 Nm

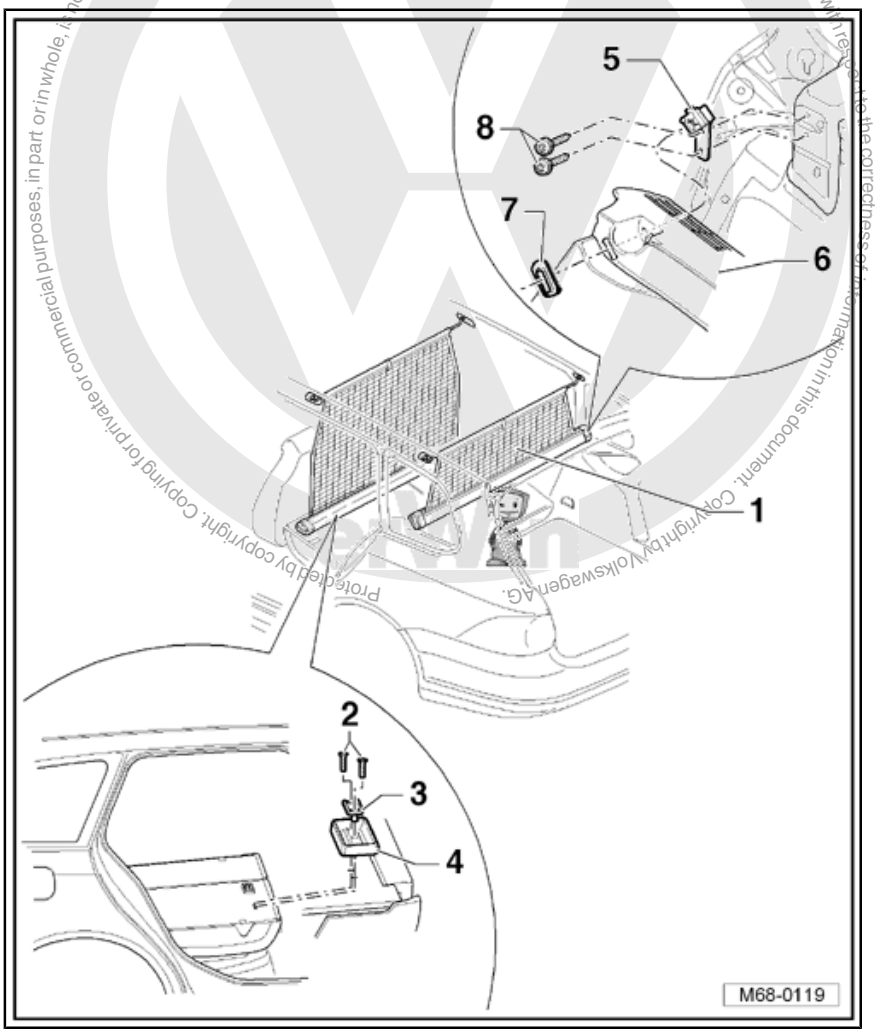

Protected by copyright. Copying for private or commercial purposes, in part or in whole, is not permitted unless authorised by Volkswagen AG. Volkswagen AG does not guarantee or accept any liability with respect to the correctness of information in this document. Copyright by Volkswagen AG.

Downloaded from www.Manualslib.com manuals search engine

5.3 Removing and installing net partition bracket on vehicles with no panorama sliding roof

1 - Net partition

- ❑ Removing and installing ⇒ page 84

2 - Bolt

- ❑ 2 Nm

3 - Remove fitting eye trim

4 - Moulded headlining

- ❑ Removing and installing ⇒ page 245

5 - Roof

6 - Rear net partition bracket

7 - Bolt

- ❑ 4.5 Nm

8 - Front net partition bracket

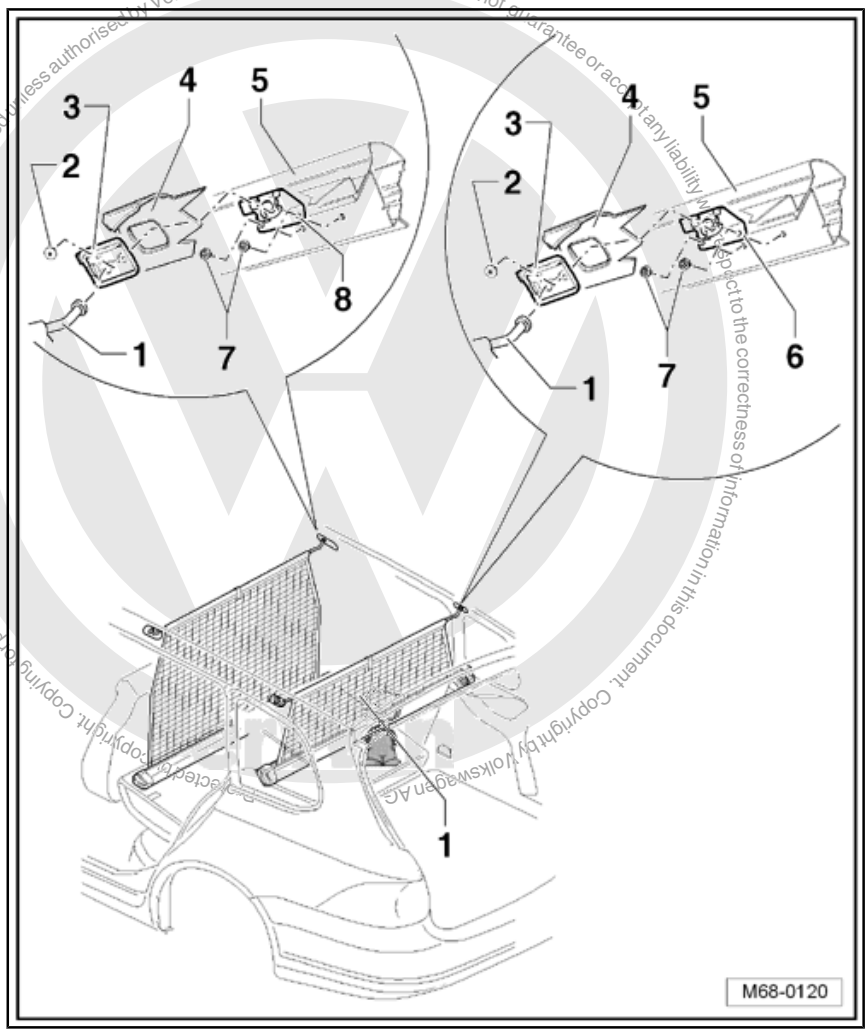

Copyright by Volkswagen AG. Volkswagen AG does not guarantee or accept any liability with respect to the correctness of information in this document. Copying for private or commercial purposes, in part or in whole, is not permitted unless authorised by Volkswagen AG.

Downloaded from www.Manualslib.com manuals search engine

5.4 Removing and installing net partition bracket on vehicles with panorama sliding roof

1 - Net partition
- ❑ Removing and installing ⇒ page 84

2 - Bolt
- ❑ 2 Nm

3 - Rear fitting eye trim

4 - Moulded headlining
- ❑ Removing and installing ⇒ page 245

5 - Roof

6 - Rear net partition bracket

7 - Bolt
- ❑ 4.5 Nm

8 - Front net partition bracket

9 - Front fitting eye trim

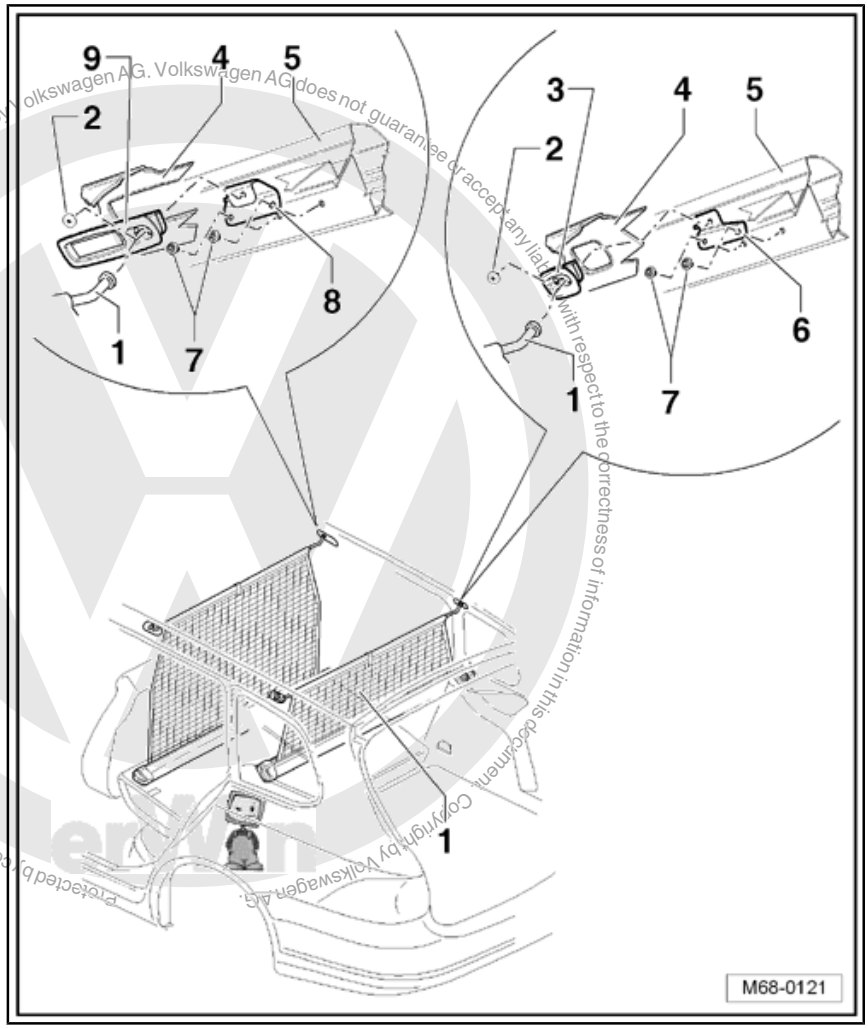

Protected by copyright. Copying for private or commercial purposes, in part or in whole, is not permitted unless authorised by Volkswagen AG. Volkswagen AG does not guarantee or accept any liability with respect to the correctness of information in this document. Copyright by Volkswagen AG.

Downloaded from www.Manualslib.com manuals search engine

69 – Passenger protection

1 Seat belts

Protected by copyright. Copying for private or commercial purposes, in part or in whole, is not permitted unless authorised by Volkswagen AG. Volkswagen AG does not guarantee or accept any liability with respect to the correctness of information in this document. Copyright by Volkswagen AG.

Downloaded from www.Manualslib.com manuals search engine

1.1 General safety regulations when working on airbag, belt tensioner and battery isolator units (pyrotechnic components)

Caution

- *Pyrotechnic components always contain a propellant that generates a gas during combustion. On some versions, a separate compressed gas reservoir is available to generate the gas.*
- *This compressed gas is stored under high pressure in a compressed gas tank.*
- *Ignition of the pyrotechnic components is by means of an electric/mechanical igniter.*
- *Testing, removing, installing and repair work may only be performed by qualified personnel.*
- *For airbag units, there are no exchange intervals.*
- *Under no circumstances should checks be carried out with a test lamp, voltmeter or ohmmeter.*
- *Pyrotechnic components may only be checked in installed state and with vehicle diagnosis, testing and information systems approved by the manufacturer.*
- *When working on pyrotechnic components and airbag control unit -J234-, the battery earth strap must be disconnected with the ignition switched on. Then cover negative terminal.*
- *A waiting time of 10 seconds is necessary after disconnecting the battery.*
- *The battery must be connected with the ignition SWITCHED ON. When doing this, there should be no-one inside the vehicle. Exception: Vehicles with battery inside passenger compartment. In this case do not stay anywhere near the effective range of the airbags and seat belts.*
- *Wash hands after coming into contact with triggered pyrotechnic components of restraint system.*
- *Pyrotechnic components must not be opened or repaired; always use new parts (risk of injury).*
- *Pyrotechnic components that have been dropped onto a hard surface or show signs of damage must not be installed in a vehicle.*
- *Before handling pyrotechnic components of the restraint system, for example before separating an electrical connection, the mechanic must electrostatically discharge himself/herself. Electrostatic discharge is achieved by touching earthed metallic parts, such as the door striker plate.*
- *Pyrotechnic components must be installed immediately after they have been removed from their packaging.*
- *If work is interrupted, the pyrotechnic component must be stored back in its packaging.*
- *Leaving the pyrotechnic component unattended is prohibited.*
- *Pyrotechnic components must not come into contact with grease, cleaning solution or similar.*
- *Pyrotechnic components must not be subjected to temperatures above 100 °C even for short periods.*

Protected by copyright. Copyright by Volkswagen AG. Volkswagen AG does not guarantee or accept any liability with respect to the correctness of information in this document.

Downloaded from www.Manualslib.com manuals search engine

1.2 Special instructions for belt tensioners

WARNING

- *Never point open end of belt tensioner at another person.*
- *Belt tensioner units must be handled with extreme caution during removal and installation. If handled incorrectly, there is a high risk of injury and damage in relation to the belt tensioner units.*
- *When connecting the belt tensioner unit, all mechanical parts (including those of the 3-point seat belt) must be properly attached. If connection of the belt tensioner unit is hindered due to tight conditions, the belt strap must be rolled up completely before connecting. In this case there is no heightened risk of safety as long as the additional safety instructions are heeded. Essentially this is aimed at battery disconnection and electrostatic discharge of the fitter prior to connection of the belt tensioner unit.*
- *Depending on the crash intensity, it is possible that the belt tensioner was triggered but the belt force limiter did NOT ignite. These parts are to be treated as unignited components!*

1.3 Storage, transportation and disposal of airbag, belt tensioner and battery isolator units (pyrotechnic components)

WARNING

- *Storage must comply with the relevant national legislation.*
- *Transportation is subject to national and international regulations that govern packaging, marking, labelling and freight documentation in detail.*
- *Untriggered pyrotechnic components must be disposed of correctly in the original packaging in accordance with national legislation. Contact your importer if in any doubt.*
- *Only completely ignited pyrotechnic components may be disposed of through the commercial waste system.*

Protected by copyright. Copyright by Volkswagen AG. Volkswagen AG does not guarantee or accept any liability with respect to the correctness of information in this document.

Downloaded from www.Manualslib.com manuals search engine

1.4 Assembly overview - front seat belts

1 - Bolt
- ❑ 40 Nm
- ❑ Microencapsulated, renew each time loosened

2 - Belt end fitting

3 - Bolt
- ❑ 40 Nm

4 - Belt inertia reel, B-pillar

5 - Wiring harness

6 - Bolt
- ❑ Qty. 2
- ❑ 4.5 Nm

7 - Belt guide

8 - Bolt
- ❑ 40 Nm

9 - Belt guide fitting

10 - Belt buckle
- ❑ Removing and installing ⇒ page 94

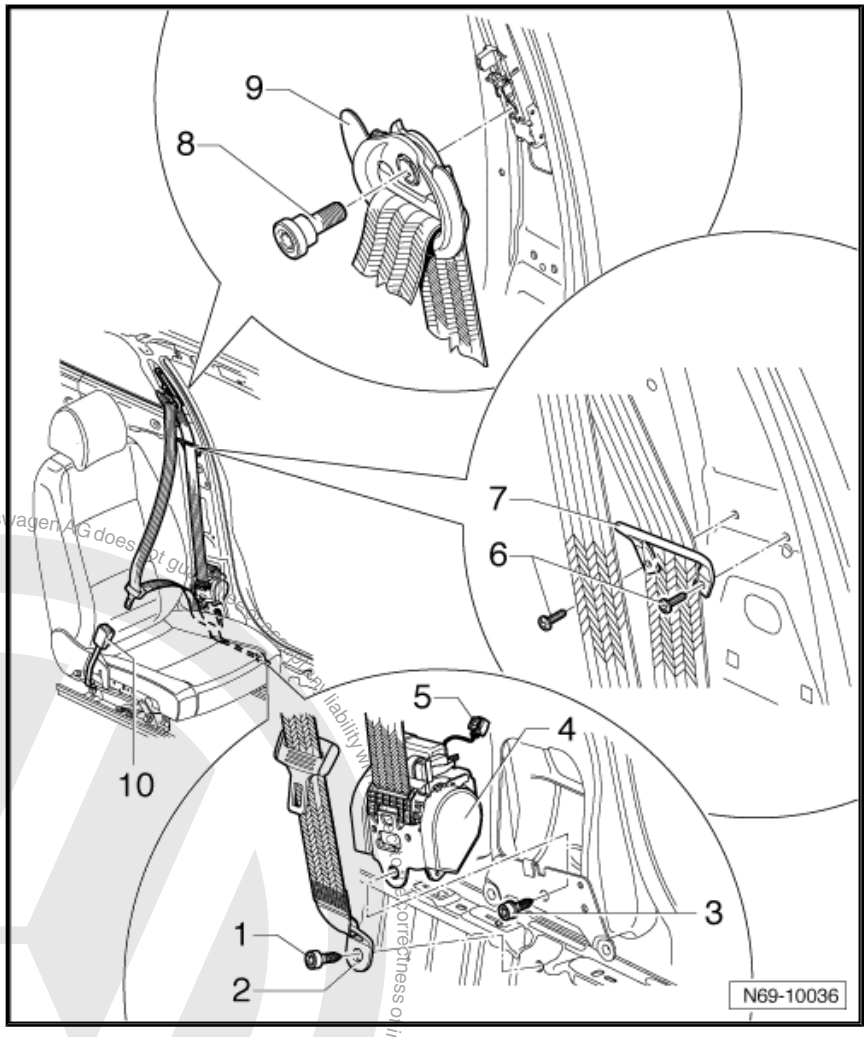

1.5 Removing and installing front seat belts

Note

Removal and installation are described for the left vehicle side. Follow same instructions for the right side as appropriate.

1.5.1 Removing

WARNING

- *Observe the general safety regulations when working on airbag, belt tensioner and battery isolator units (pyrotechnic components)* *⇒ page 89*
- *Follow the special instructions for belt tensioners* *⇒ page 90* *.*

Downloaded from www.Manualslib.com manuals search engine

– Disconnect vehicle battery ⇒ Electrical system; Rep. Gr. 27 ; Disconnecting and reconnecting battery .

– Remove upper trim for B-pillar ⇒ page 213 .

– Remove lower B-pillar trim ⇒ page 215 .

– Remove bolt -1- (40 Nm) and remove belt end anchor -2- from body.

Caution

Bolt -1- may be microencapsulated. For this reason, the bolt has to be heated with a hot air blower before it can be loosened. The neighbouring seat belt must be protected against the heat with a damp cloth when doing this.

Note

- *If the bolt is microencapsulated, it must be renewed if loosened.*
- *Before a new bolt is installed, the thread of the nut must be cleaned and chased as necessary.*

– Remove bolt -3- (40 Nm) and remove belt inertia reel -4- from B-pillar.

WARNING

Electrostatic discharges may result in unintentional triggering of belt tensioner. Therefore, the mechanic must electrostatically discharge him/herself before disconnecting the igniter and earth wires. This can be done by briefly touching the body or striker plate of the door.

– Disconnect wiring harness -5-.

– Remove bolts -6- (4.5 Nm) and remove belt guide -7-.

– Remove bolt -8- (40 Nm) and remove belt guide fitting -9- from belt height adjuster.

Protected by copyright. Copying for private or commercial purposes, in part or in whole, is not permitted unless authorised by Volkswagen AG. Volkswagen AG does not guarantee or accept any liability with respect to the correctness of information in this document. Copyright by Volkswagen AG.

Downloaded from www.Manualslib.com manuals search engine

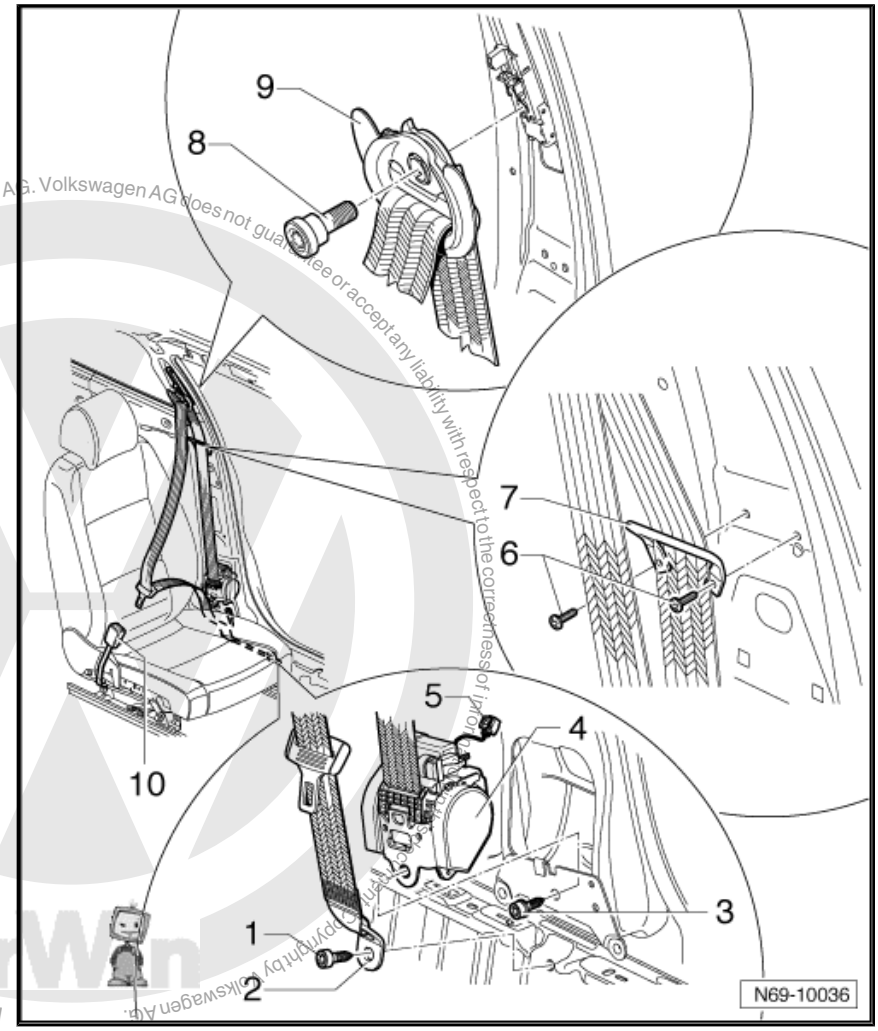

Protected by copyright. Copying for private or commercial purposes, in part or in whole, is not permitted unless authorised by Volkswagen AG. Volkswagen AG does not guarantee or accept any liability with respect to the correctness of information.

1.5.2 Installing

– Install in reverse order of removal.

– Reconnect vehicle battery ⇒ Rep. Gr. 27 .

1.6 Removing and installing front belt height adjuster

Note

Removal and installation are described for the left vehicle side.
Follow same instructions for the right side as appropriate.

1.6.1 Removing

– Remove upper trim for B-pillar ⇒ page 213 .

Note

There is no need to remove the belt end anchor or anchor rail from front seat belt .

Downloaded from www.Manualslib.com manuals search engine

– Remove bolt -1- (40 Nm) and remove belt guide fitting -2- from belt height adjuster.

– Remove bolt -3- (20 Nm) and remove belt height adjuster -4- from mountings in support bracket.

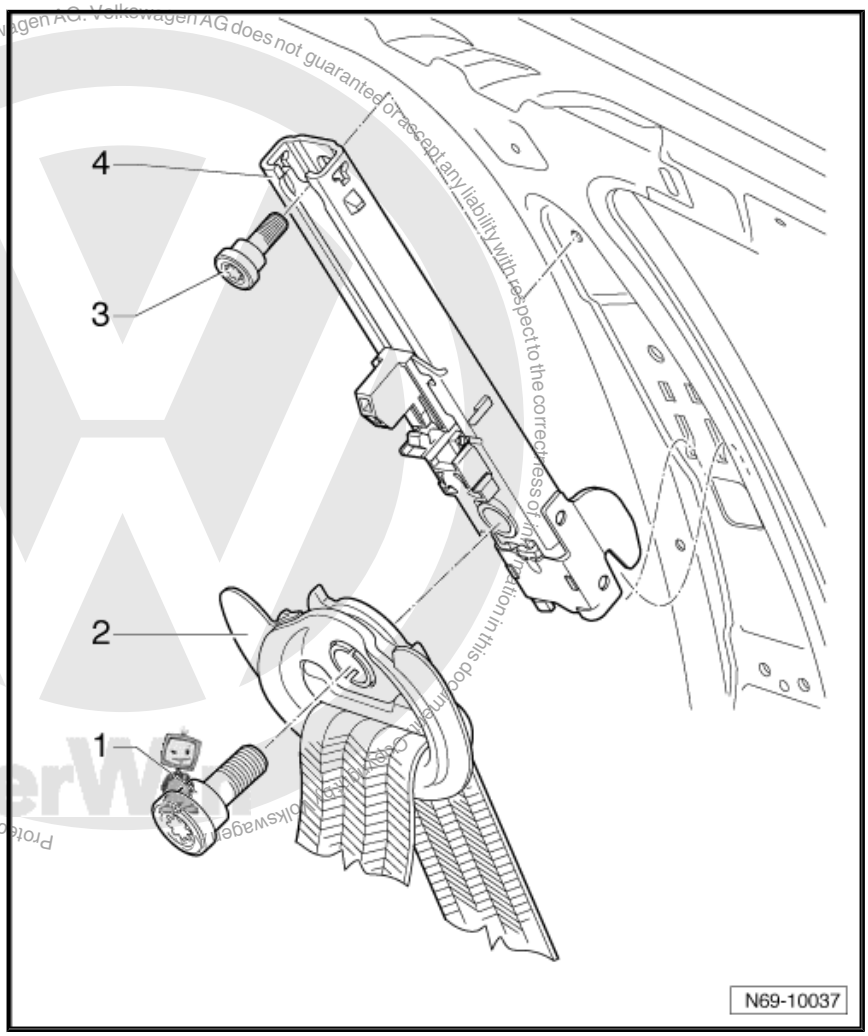

Protected by copyright. Copying for private or commercial purposes, in part or in whole, is not permitted unless authorised by Volkswagen AG. Volkswagen AG does not guarantee or accept any liability with respect to the correctness of information in this document. Copyright by Volkswagen AG.

1.6.2 Installing

– Install in reverse order of removal.

1.7 Removing and installing front belt buckle

Note

Removal and installation is described for left side of vehicle. Follow same instructions for removal and installation of belt buckle on right side as appropriate.

1.7.1 Removing

– Attach seat repair stand -VAS 6136- to engine and gearbox support -VAS 6095- .

Downloaded from www.Manualslib.com manuals search engine

– Remove front seat ⇒ page 251 .
– Secure seat to seat repair stand -VAS 6136- .
– Move seat to rearmost position.
– Disconnect belt buckle wiring harness from seat frame.
– Remove cover cap from seat rail.
– Remove bolt -1- (20 Nm).

Note

♦ *The bolt is microencapsulated and must be renewed each time it is loosened.*
♦ *Before a new bolt is installed, the thread of the nut must be cleaned and chased as necessary.*

– Pull belt buckle -2- out of mounting in seat rail -arrow-.

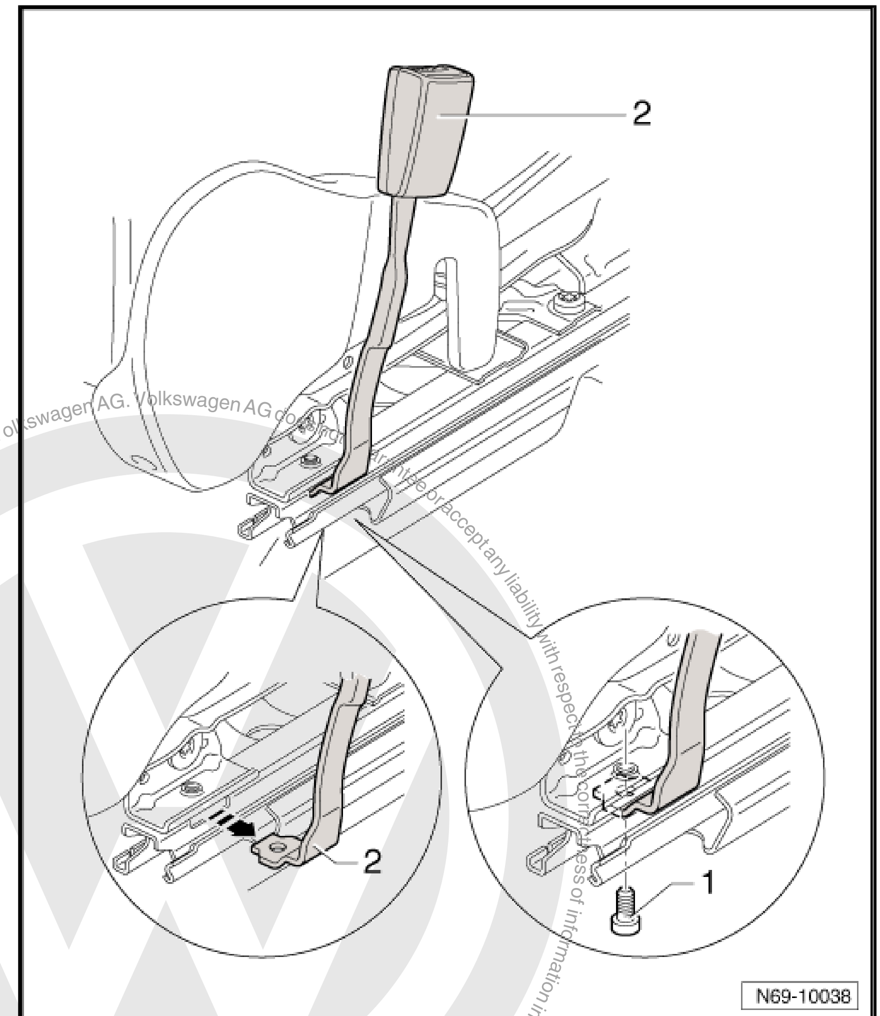

Protected by copyright. Copying for private or commercial purposes, in part or in whole, is not permitted unless authorised by Volkswagen AG. Volkswagen AG does not guarantee or accept any liability with respect to the correctness of information in this document. Copyright by Volkswagen AG.

1.7.2 Installing

– Install in reverse order of removal.

Downloaded from www.Manualslib.com manuals search engine

Protected by copyright. Copying for private or commercial purposes, in part or in whole, is not permitted unless authorised by Volkswagen AG. Volkswagen AG does not guarantee or accept any liability with respect to the correctness of information in this document. Copyright by Volkswagen AG.

1.8 Assembly overview - rear outer seat belts (saloon)

1 - Bolt
- ❑ 40 Nm

2 - Belt end fitting

3 - Wiring harness

4 - Bolt
- ❑ 40 Nm

5 - Belt inertia reel with belt tensioner

6 - Bolt
- ❑ 40 Nm

7 - Belt inertia reel with no belt tensioner

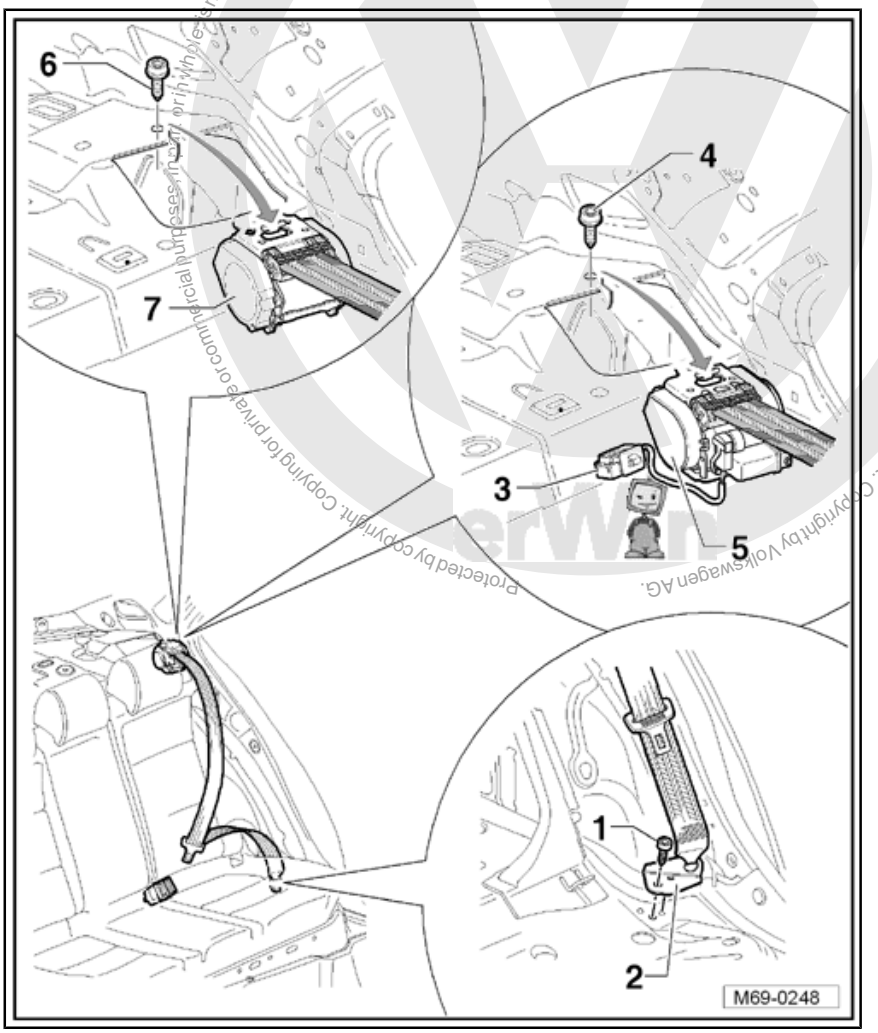

1.9 Removing and installing rear outer seat belts (saloon)

Note

Removal and installation are described for the left vehicle side.
Follow same instructions for the right side as appropriate.

1.9.1 Removing

– Remove bench seat ⇒ page 284 .

– Remove side padding:

♦ With rear side airbags ⇒ page 287

♦ With no rear side airbags ⇒ page 288

– Remove C-pillar trim ⇒ page 217 .

– Remove rear shelf ⇒ page 221 .

Downloaded from www.Manualslib.com manuals search engine

– Remove bolt -1- (40 Nm) and remove belt guide fitting -2- from body.

Vehicles with belt tensioner

– Disconnect vehicle battery ⇒ Electrical system; Rep. Gr. 27 ; Disconnecting and reconnecting battery .

> **WARNING**
>
> *Electrostatic discharges may result in unintentional triggering of airbag. Therefore, the mechanic must electrostatically discharge him/herself before disconnecting wiring. This can be done by briefly touching the body or striker plate of the door.*

– Disconnect wiring harness -3-.

– Remove bolt -4- (40 Nm) and remove belt inertia reel -5- from body -arrow-.

Vehicles with no belt tensioner

– Remove bolt -6- (40 Nm) and remove belt inertia reel -7- from body -arrow-.

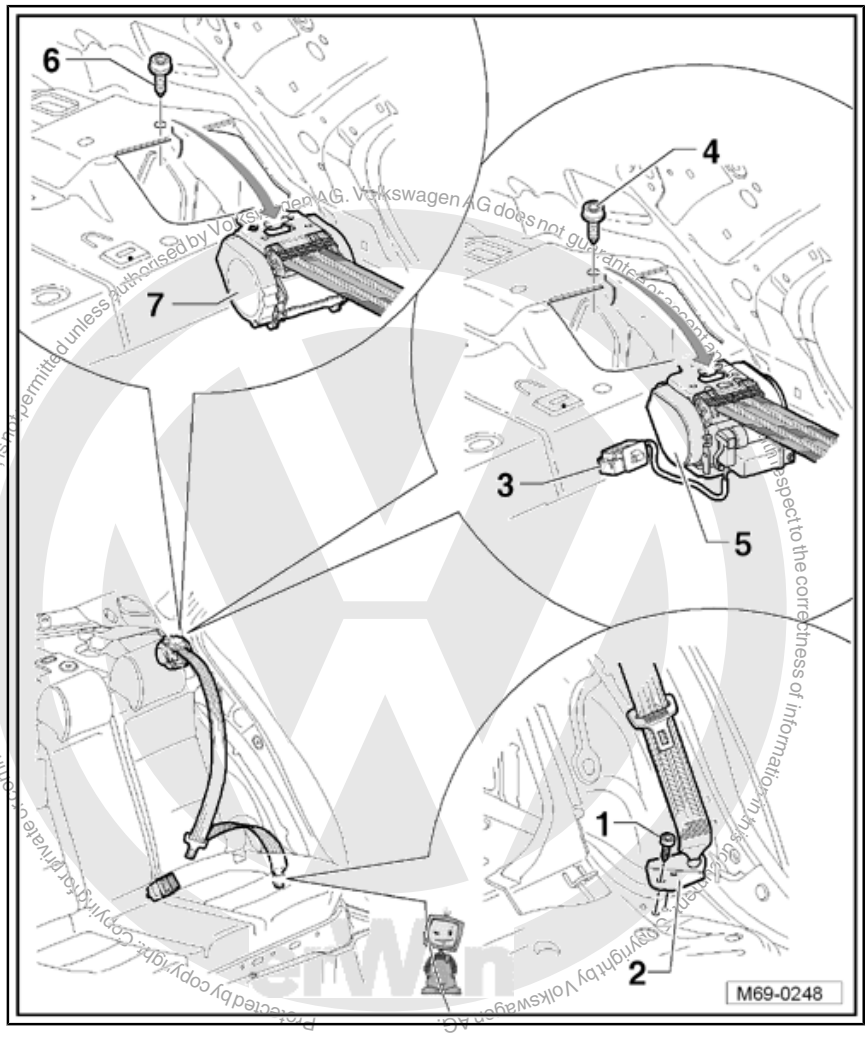

Downloaded from www.Manualslib.com manuals search engine

1.9.2 Installing

– Install in reverse order of removal.

1.10 Assembly overview - rear outer seat belts (Variant)

1 - Bolt
- ❑ 40 Nm

2 - Belt guide fitting

3 - Belt guide

4 - Bolt
- ❑ Qty. 2
- ❑ 6 Nm

5 - Belt inertia reel with belt tensioner

6 - Bolt
- ❑ 40 Nm

7 - Connector, wiring harness

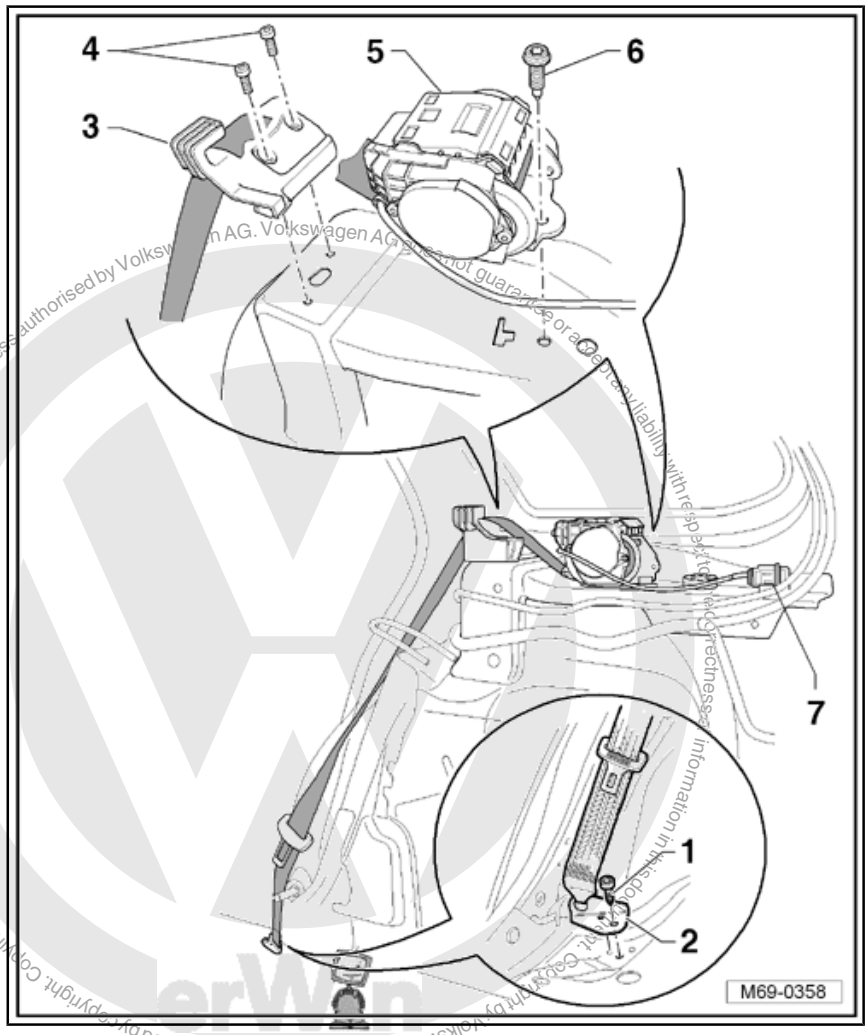

1.11 Removing and installing rear outer seat belts (Variant)

Note

Removal and installation is described for right side of vehicle.
Follow same instructions for left side as appropriate.

1.11.1 Removing

– Remove side padding:

♦ With rear side airbags ⇒ page 287

♦ With no rear side airbags ⇒ page 288

– Remove luggage compartment side trim ⇒ page 231

Downloaded from www.Manualslib.com manuals search engine

– Remove bolt -1- (40 Nm) and remove belt guide fitting -2- from body.

Vehicles with belt tensioner

– Disconnect vehicle battery ⇒ Electrical system; Rep. Gr. 27 ; Disconnecting and reconnecting battery .

> **WARNING**
>
> *Electrostatic discharges may result in unintentional triggering of airbag. Therefore, the mechanic must electrostatically discharge him/herself before disconnecting wiring. This can be done by briefly touching the body or striker plate of the door.*

– Disconnect wiring harness connector -7-.

All vehicles

– Unbolt bolt -6- (40 Nm) and release belt inertia reel -5- from mounting.

– To remove belt guide -3-, unbolt bolts -4- (6 Nm) and take belt guide off upwards.

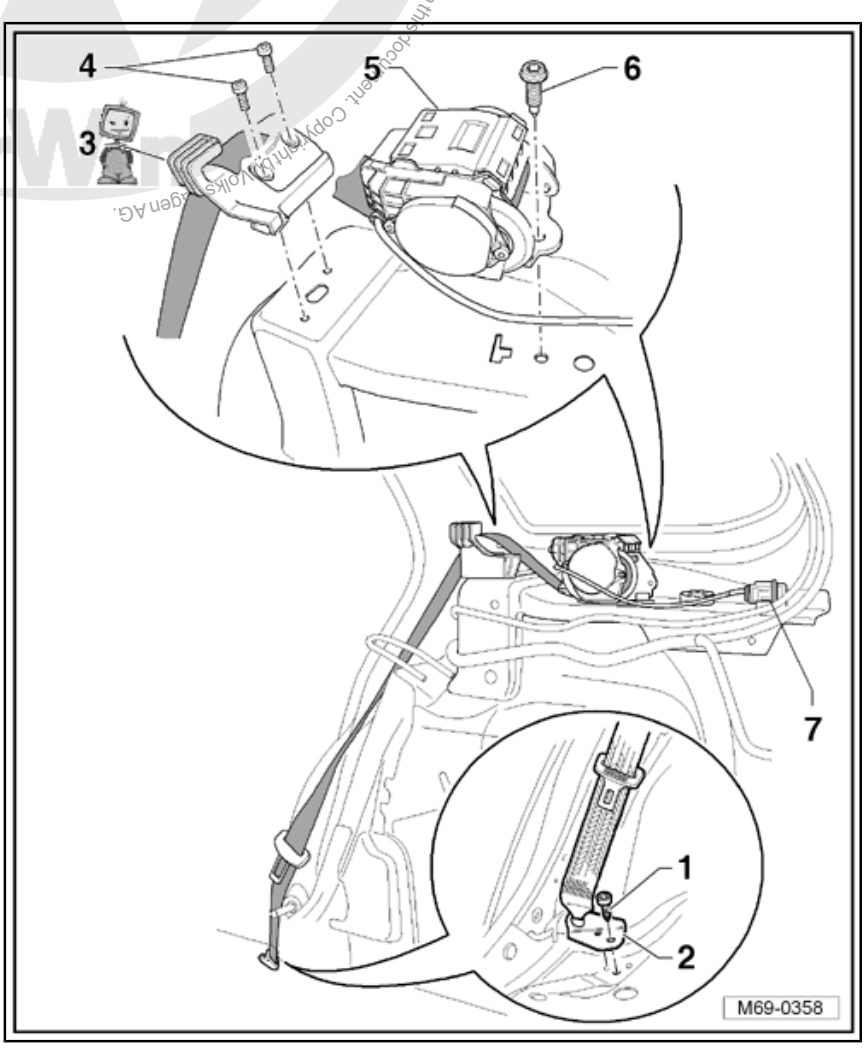

Protected by copyright. Copying for private or commercial purposes, in part or in whole, is not permitted unless authorised by Volkswagen AG. Volkswagen AG does not guarantee or accept any liability with respect to the correctness of information in this document. Copyright by Volkswagen AG.

Downloaded from www.Manualslib.com manuals search engine

1.11.2 Installing

– Install in reverse order of removal.

1.12 Assembly overview - rear centre 3-point seat belt

1 - Bolt
- ❑ 40 Nm

2 - Belt buckle

3 - Hexagon nut
- ❑ 40 Nm

4 - Belt inertia reel

5 - Console

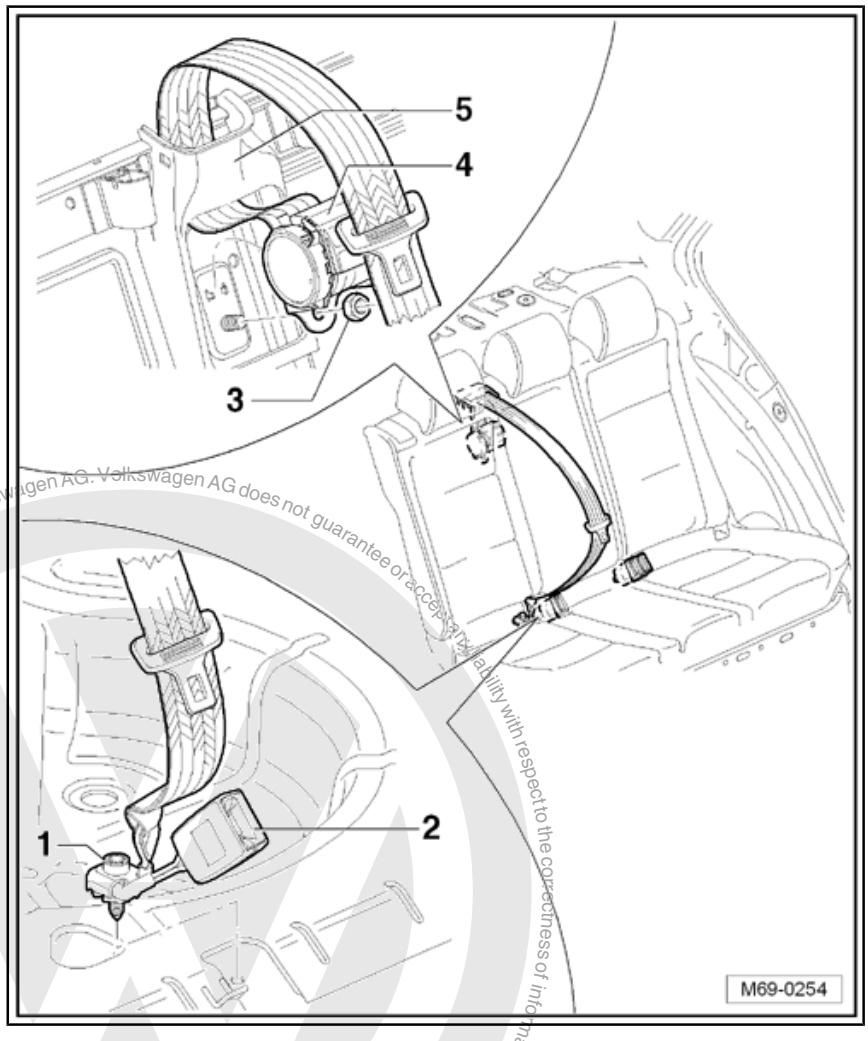

1.13 Removing and installing rear centre 3-point seat belt

1.13.1 Removing

Saloon

– Remove bench seat ⇒ page 284 .

– Remove backrest ⇒ page 285 .

– Remove cover and padding from seat backrest ⇒ page 302 .

Variant

– Fold bench seat forwards.

– Remove backrest ⇒ page 285 .

Protected by copyright. Copyright by Volkswagen AG. Volkswagen AG does not guarantee or accept any liability with respect to the correctness of information in this document. Copying for private or commercial purposes, in part or in whole, is not permitted unless authorised by Volkswagen AG.

Downloaded from www.Manualslib.com manuals search engine

– Remove cover and padding from seat backrest ⇒ page 305 .

All vehicles

– Remove bolt -1- (40 Nm) and remove belt buckle -2- from body.

– Remove hexagon nut -3- (40 Nm) and remove belt inertia reel -4- from console -5-.

– Guide belt buckle -2- through console -5-.

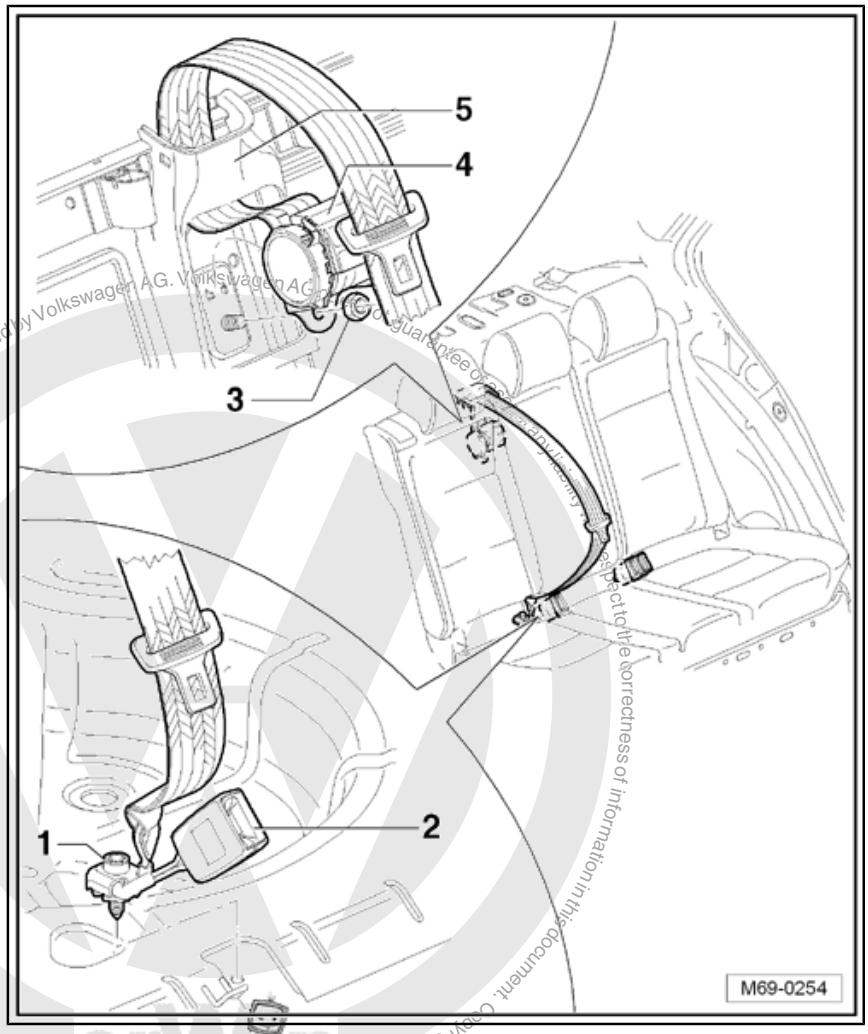

Protected by copyright. Copyright for private or commercial purposes, in part or in whole, is not permitted unless authorised by Volkswagen AG. Volkswagen AG does not guarantee or accept any liability with respect to the correctness of information in this document. Copyright by Volkswagen AG.

1.13.2 Installing

– Install in reverse order of removal.

1.14 Removing and installing middle rear seat lap belt

1.14.1 Removing

– Remove bench seat ⇒ page 298 .

– Remove backrest:

Downloaded from www.Manualslib.com manuals search engine

- Removing and installing backrest cover and padding (saloon) ⇒ page 302 .
- Removing and installing backrest cover and padding (Variant) ⇒ page 305 .

– Remove bolt -1- (40 Nm) and remove lap belt -2- from body.

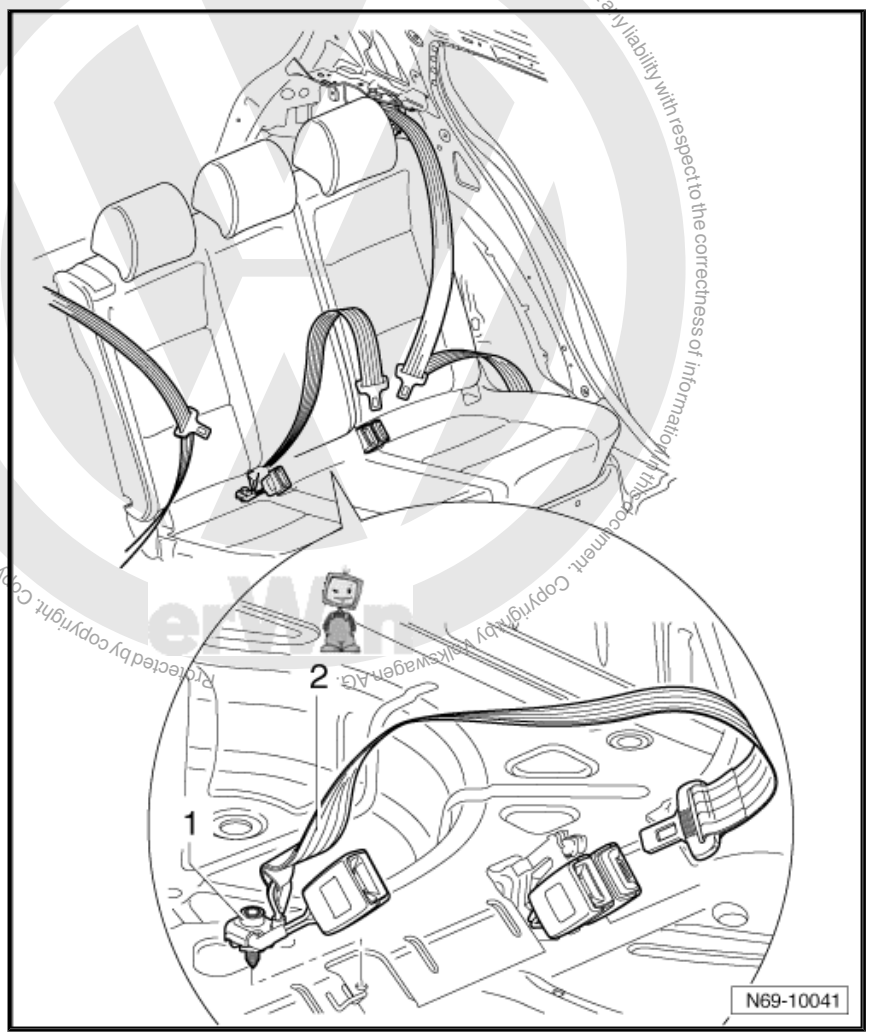

1.14.2 Installing

– Install in reverse order of removal.

1.15 Removing and installing rear double belt buckle

1.15.1 Removing

Saloon

– Remove bench seat ⇒ page 284 .

Variant

– Fold bench seat forwards.

Downloaded from www.Manualslib.com manuals search engine

All vehicles

– Remove backrest ⇒ page 285 .

– Remove bolt -1- (40 Nm) and remove double belt buckle -2- from body.

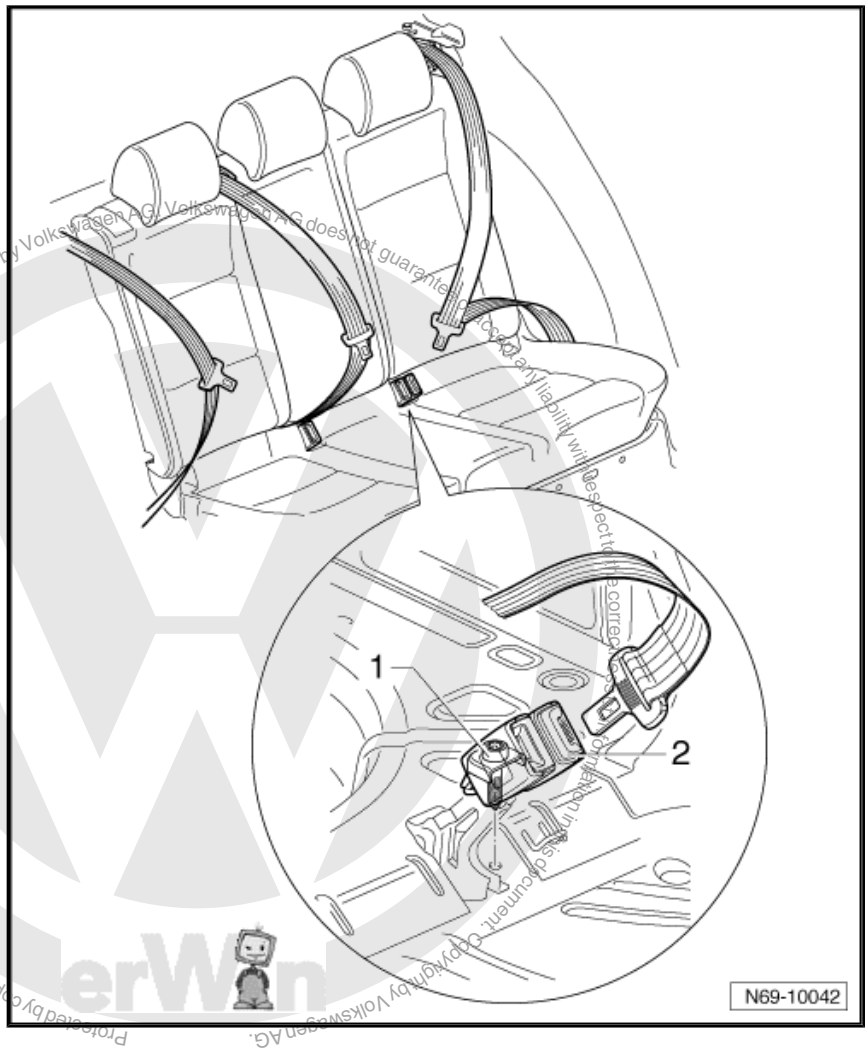

Protected by copyright. Copying for private or commercial purposes, in part or in whole, is not permitted unless authorised by Volkswagen AG. Volkswagen AG does not guarantee or accept any liability with respect to the correctness of information in this document. Copyright by Volkswagen AG.

1.15.2 Installing

– Install in reverse order of removal.

Downloaded from www.Manualslib.com manuals search engine

2 Inspecting seat belts

WARNING

The seat belt system must be inspected systematically after every accident! If damage is determined at any of the points to be checked, customer must be informed regarding necessity of changing belts.

Check points:

- Check belt webbing
- Check inertia reel (locking mechanism)
- Visually check belt buckle
- Check operation of belt buckle
- Check belt guide fittings and latch plate
- Check securing parts and anchorage points

2.1 Points to check

2.1.1 Checking belt webbing

– Pull belt webbing completely out of inertia reel.

– Check belt webbing for soiling, and if necessary wash with a mild soapy solution ⇒ Owner's Manual .

Protected by copyright. Copying for private or commercial purposes, in part or in whole, is not permitted unless authorised by Volkswagen AG. Volkswagen AG does not guarantee or accept any liability with respect to the correctness of information in this document. Copyright by Volkswagen AG.

Downloaded from www.Manualslib.com manuals search engine

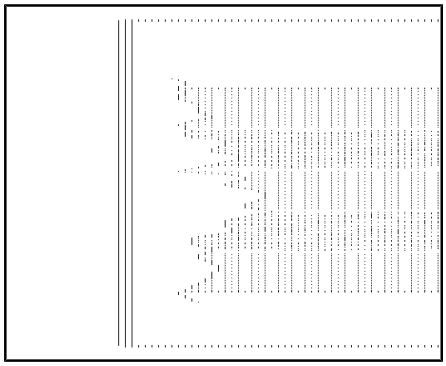

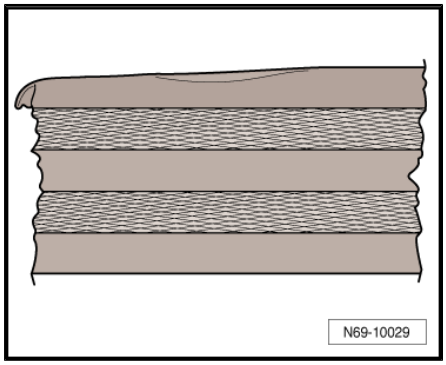

- If either of the following illustrated damage examples (points 1 or 2) are found on accident vehicle - renew seat belt complete with belt buckle and belt height adjustment.
- If damage as illustrated under points 1, 2, 3 and 4 is determined on a vehicle which has not been involved in an accident, it is sufficient to renew damaged belt only.
- Belt webbing cut, torn or chafed.
- Torn webbing loops on belt edge.
- Burn marks from cigarettes or similar.
- One edge of belt deformed or wavy.

2.1.2 Checking inertia reel (locking mechanism)

The inertia reel has two locking functions.

◆ The first locking function is triggered by the belt being jerked out of reel (belt extraction acceleration).

Checking

– Pull belt out of inertia reel with firm jerk.

◆ Will not lock - renew seat belt complete with buckle.

◆ If difficulties are experienced when belt is extended or retracted, first check whether position of inertia reel has been altered.

◆ The second locking function is triggered by a change in vehicle speed (vehicle-dependent locking function). Vehicle must be moved over a flat level surface for this.

Checking

– Put on seat belt.

– Accelerate vehicle to 20 km/h and then carry out emergency braking with foot brake.

◆ If seat belt is not locked by locking mechanism during braking procedure, renew seat belt complete with buckle.

WARNING

For safety reasons, the road test should be carried out on a traffic-free stretch to ensure that other road users are not endangered.

Protected by Volkswagen AG. Volkswagen AG does not guarantee or accept any liability with respect to the correctness of information in this document. Copyright by Volkswagen AG. Any use of commercial purposes, in part or in whole, is not permitted unless authorised by Volkswagen AG.

Downloaded from www.Manualslib.com manuals search engine

2.1.3 Visually checking belt buckle

– Inspect belt buckle for cracks and chips.

♦ If damage is determined, renew seat belt complete with belt buckle.

2.1.4 Checking operation of belt buckle

Checking belt buckle:

– Push latch plate into belt buckle until it engages audibly. Check whether locking mechanism is properly engaged by pulling firmly on belt webbing.

♦ If latch plate fails even once to engage properly in belt buckle during at least 5 tests, renew seat belt complete with belt buckle.

Checking release mechanism:

– Release seat belt by pressing button on belt buckle with finger pressure.

– When belt is slack, latch plate must spring out of belt buckle on its own.

♦ Carry out test at least 5 times. If latch plate fails even once to spring out of buckle, renew seat belt complete with belt buckle.

> ⚠ **WARNING**
>
> ***Under no circumstances whatsoever may lubricant be used to eliminate noise or stiffness in belt buckle buttons.***

2.1.5 Checking belt guide fittings and latch plates

Plastic-coated fittings show fine, parallel scoring after stress on belt system (when belt was fastened during accident) (on the other hand, wear caused by frequent belt use can be recognized by smooth wear, free of lines).

– Inspect for deformation, fracturing and cracks in plastic.

♦ If scoring and/or damage is determined, renew seat belt complete with belt latch.

2.1.6 Checking securing parts and anchorage points

Carry out following visual and functional checks:

♦ Latch plate deformed (stretched)

♦ Height adjuster non-functional

♦ Anchorage points (seat, pillars, vehicle floor) distorted or thread damaged

If damage is determined on these parts, renew seat belt complete with belt buckle.

If damage is determined at securing points, renew respectively.

Protected by copyright. Copying for private or commercial purposes, part or whole is not permitted unless authorised by Volkswagen AG. Volkswagen AG does not guarantee or accept any liability with respect to the correctness of information in this document. Copyright by Volkswagen AG.

Downloaded from www.Manualslib.com manuals search engine

Note

In case of damage resulting not from an accident, but for example, from wear, only the part which is actually damaged need be renewed.

Protected by copyright. Copying for private or commercial purposes, in part or in whole, is not permitted unless authorised by Volkswagen AG. Volkswagen AG does not guarantee or accept any liability with respect to the correctness of information in this document. Copyright by Volkswagen AG.

Downloaded from www.Manualslib.com manuals search engine

3 Checking child seat anchors (ISO-FIX) after an accident

3.1 Points to check

- Child seat anchors must be checked for damage and deformation after an accident.
- Child seat anchors welded to body must not be repaired or straightened.
- If child seat anchors bolted to body are damaged or deformed, they must be renewed.

3.2 Removing and installing child seat anchorages in rear shelf

3.2.1 Removing

– Open cover cap -1-.

– Remove bolt -2- (20 Nm).

– Remove child seat anchorage -3- from rear shelf.

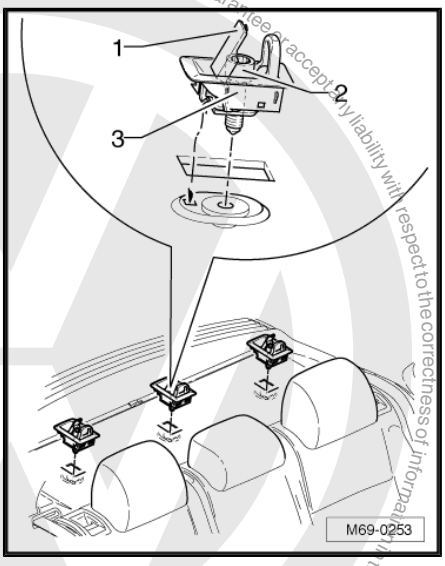

3.2.2 Installing

– Install in reverse order of removal.

Protected by copyright. Copying for private or commercial purposes, in part or in whole, is not permitted unless authorised by Volkswagen AG. Volkswagen AG does not guarantee or accept any liability with respect to the correctness of information in this document. Copyright by Volkswagen AG.

Downloaded from www.Manualslib.com manuals search engine

4 Airbag

4.1 Overview of locations - airbag systems

1 - Driver side airbag unit

- ❑ Removing and installing ⇒ page 116

2 - Airbag warning lamp -K75-

3 - Front passenger side airbag unit

- ❑ Removing and installing ⇒ page 130

4 - Side airbag, driver side

- ❑ Removing and installing ⇒ page 135

5 - Side airbag, front passenger side

- ❑ Removing and installing ⇒ page 135

6 - Rear side airbag, driver side

- ❑ Removing and installing ⇒ page 136

7 - Rear side airbag, front passenger side

- ❑ Removing and installing ⇒ page 136

8 - Airbag control unit -J234-

- ❑ Removing and installing ⇒ page 114
- ❑ Adapting components (coding) ⇒ page 147

9 - Diagnosis connector

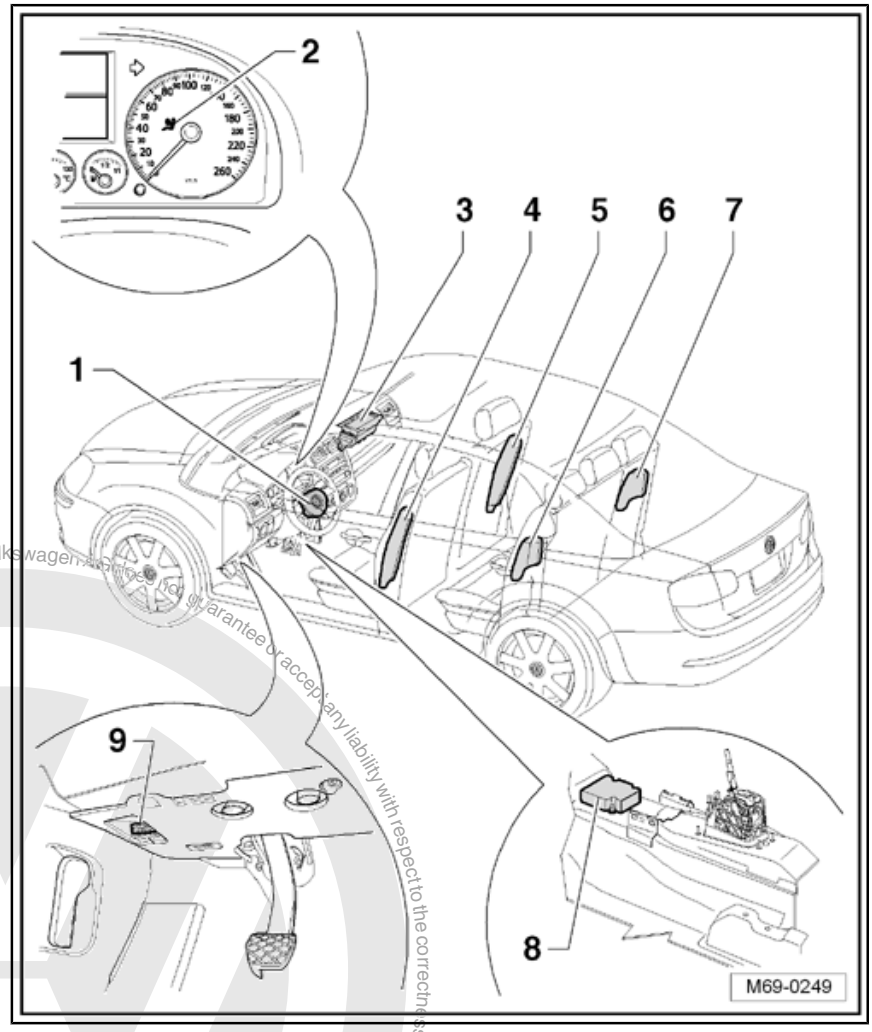

Protected by copyright. Copying for private or commercial purposes, in part or in whole, is not permitted unless authorised by Volkswagen AG. Volkswagen AG does not guarantee or accept any liability with respect to the correctness of information in this document. Copyright by Volkswagen AG.

Downloaded from www.Manualslib.com manuals search engine

Protected by copyright. Copying for private or commercial purposes, in part or in whole, is not permitted unless authorised by Volkswagen AG. Volkswagen AG does not guarantee or accept any liability with respect to the correctness of information in this document. Copyright by Volkswagen AG.

10 - Curtain airbag, driver side

- ❑ Removing and installing on saloon ⇒ page 138
- ❑ Removing and installing on Variant ⇒ page 140

11 - Curtain airbag, front passenger side

- ❑ Removing and installing on saloon ⇒ page 138
- ❑ Removing and installing on Variant ⇒ page 140

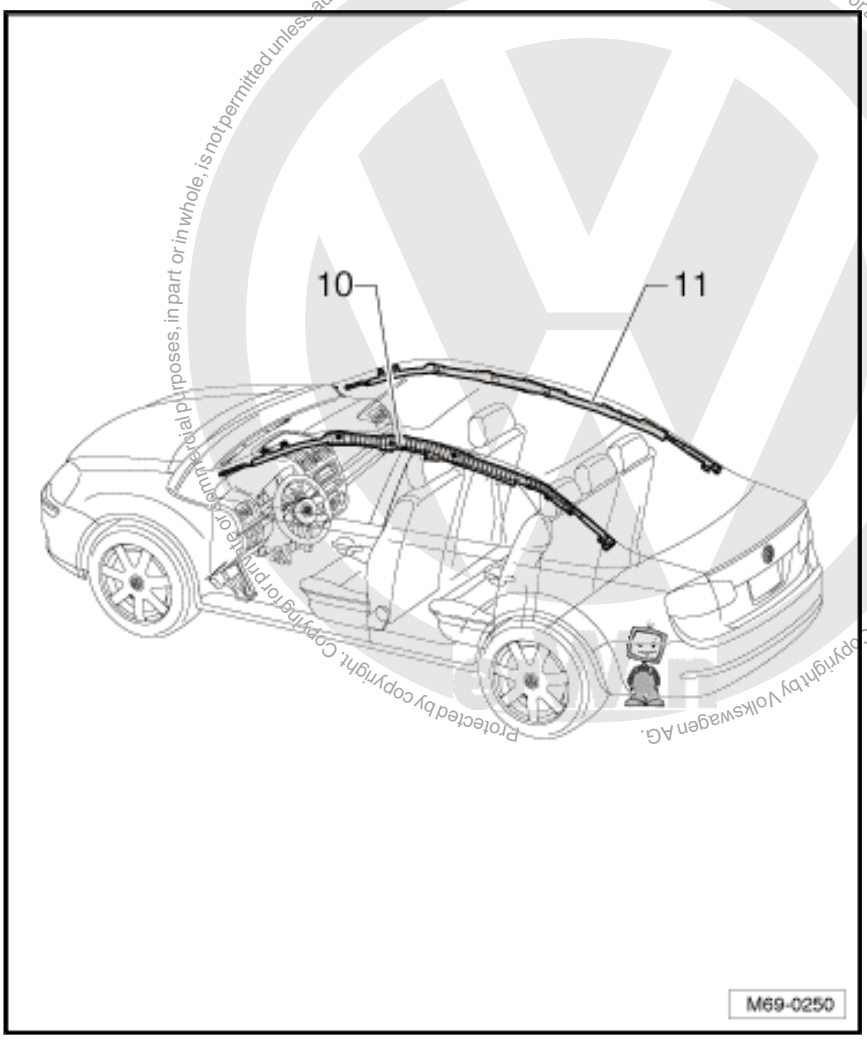

Downloaded from www.Manualslib.com manuals search engine

4.2 General safety regulations when working on airbag, belt tensioner and battery isolator units (pyrotechnic components)

WARNING

- *Pyrotechnic components always contain a propellant that generates a gas during combustion. On some versions, a separate compressed gas reservoir is available to generate the gas.*
- *This compressed gas is stored under high pressure in a compressed gas tank.*
- *Ignition of the pyrotechnic components is by means of an electric/mechanical igniter.*
- *Testing, removing, installing and repair work may only be performed by qualified personnel.*
- *For airbag units, there are no exchange intervals.*
- *Under no circumstances should checks be carried out with a test lamp, voltmeter or ohmmeter.*
- *Pyrotechnic components may only be checked in installed state and with vehicle diagnosis, testing and information systems approved by the manufacturer.*
- *When working on pyrotechnic components and airbag control unit -J234-, the battery earth strap must be disconnected with the ignition switched on. Then cover negative terminal.*
- *A waiting time of 10 seconds is necessary after disconnecting the battery.*
- *The battery must be connected with the ignition SWITCHED ON. When doing this, there should be no-one inside the vehicle. Exception: Vehicles with battery inside passenger compartment. In this case do not stay anywhere near the effective range of the airbags and seat belts.*
- *Wash hands after coming into contact with triggered pyrotechnic components of restraint system.*
- *Pyrotechnic components must not be opened or repaired; always use new parts (risk of injury).*
- *Pyrotechnic components that have been dropped onto a hard surface or show signs of damage must not be installed in a vehicle.*
- *Before handling pyrotechnic components of the restraint system, for example before separating an electrical connection, the mechanic must electrostatically discharge himself/herself. Electrostatic discharge is achieved by touching earthed metallic parts, such as the door striker plate.*
- *Pyrotechnic components must be installed immediately after they have been removed from their packaging.*
- *If work is interrupted, the pyrotechnic component must be stored back in its packaging.*
- *Leaving the pyrotechnic component unattended is prohibited.*
- *Pyrotechnic components must not come into contact with grease, cleaning solution or similar.*
- *Pyrotechnic components must not be subjected to temperatures above 100 °C even for short periods.*

Copyright by Volkswagen AG. Volkswagen AG does not guarantee or accept any liability with respect to the correctness of information in this document.

Downloaded from www.Manualslib.com manuals search engine

4.3 Special instructions for driver and front passenger airbag

WARNING

- *Removed driver and front passenger airbag units must be stored with padded side upwards.*

4.4 Special instructions for curtain airbag modules

WARNING

- *Place removed curtain airbag modules in packaging or on a clean, flat surface on a cover.*
- *Folding is acceptable as long as no damage is caused (in particular to the protective sleeve).*
- *To prevent any potential damage during removal and installation, curtain airbags must be handled with extreme caution.*
- *Until the gas generator is screwed in place, always hold it firmly by hand when handling (transportation, removal and installation, etc.).*

4.5 Storage, transportation and disposal of airbag, belt tensioner and battery isolator units (pyrotechnic components)

WARNING

- *Storage must comply with the relevant national legislation.*
- *Transportation is subject to national and international regulations that govern packaging, marking, labelling and freight documentation in detail.*
- *Untriggered pyrotechnic components must be disposed of correctly in the original packaging in accordance with national legislation. Contact your importer if in any doubt.*
- *Only completely ignited pyrotechnic components may be disposed of through the commercial waste system.*

4.6 Deactivating the airbag

WARNING

The prerequisites for deactivating one or more airbag units have been published in the "Technical Service Handbook".

In the "Technical Service Handbook 2", the "Procedure ID" or the "Technical solution number" for the deactivation of airbag units is: "2000987".

ElsaWin

Downloaded from www.Manualslib.com manuals search engine

→ Technical solution

→ Technical Service Handbook

→ Technical solutions

→ Vehicle electrics

→ Function

→ Passenger protection

→ Deactivation of airbag units

→ Systems

4.7 Renewing airbag units following an accident

4.7.1 Accident involving triggering of airbag

Following the renewal of airbag units or the airbag control unit, the labels (only tear-off strips) of the new components must be stuck onto the “Registry note 2 for Airbag Systems”. For registration, the “Registry note 2 for Airbag Systems” must be sent on to the responsible distribution centre or importer.

The “Registry note 2 for Airbag Systems” can be printed out of the “Technical Service Handbook”:

ElsaWin

→ Technical solution

→ Technical Service Handbook

→ Technical solutions

→ Vehicle electrics

→ Function

→ Passenger protection

→ Deactivation of airbag units

→ Systems

In the “Technical Service Handbook 2”, the “Procedure ID” or the “Technical solution number” for this procedure is: “2000987”.

As a matter of rule, the following components will have to be renewed following an accident where the airbag has been triggered:

- All triggered airbag units
- Supports and retainer for front passenger module if front passenger airbag was triggered.
- Coil connector with slip ring, when driver airbag has triggered.
- All seat belts with triggered belt tensioners
- In addition, the following must also be replaced if necessary (visual check): All damaged components

4.7.2 Accident not involving triggering of airbag

- If airbag warning lamp -K75- does not indicate a fault, there is no requirement to replace airbag components. The seat belts should be checked separately.

Protected by copyright. Copying for private or commercial purposes, in part or in whole, is not permitted unless authorised by Volkswagen AG. Volkswagen AG does not guarantee or accept any liability with respect to the correctness of information in this document. Copyright by Volkswagen AG.

Downloaded from www.Manualslib.com manuals search engine

4.8 Removing and installing airbag control unit -J234-

WARNING

When working on airbag control unit -J234- , observe the general safety regulations for work on airbag, belt tensioner and battery isolator units (pyrotechnic components) *⇒ page 89* *.*

4.8.1 Removing

– Disconnect vehicle battery ⇒ Electrical system; Rep. Gr. 27 ; Disconnecting and reconnecting battery .

– Unclip cover -1- from trim using a small screwdriver.

– Remove bolt -2- (1.5 Nm).

– Pull footwell trim -3- out of fasteners.

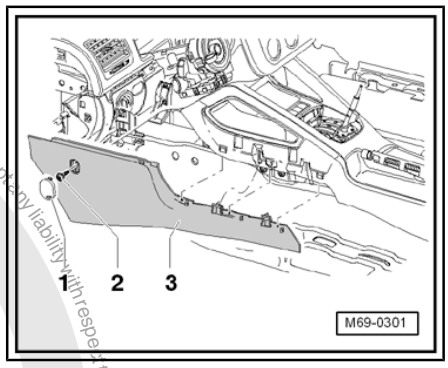

Note

Further components of the centre console need to be removed.

– Remove nuts -1- (2.5 Nm).

– Remove securing bracket -2-.

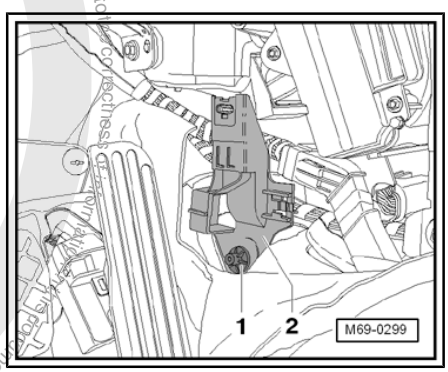

Note

Removal of right footwell trim is identical.

– Open locking device of connector -1- in direction of -arrow- and disconnect wiring harness from control unit -2-.

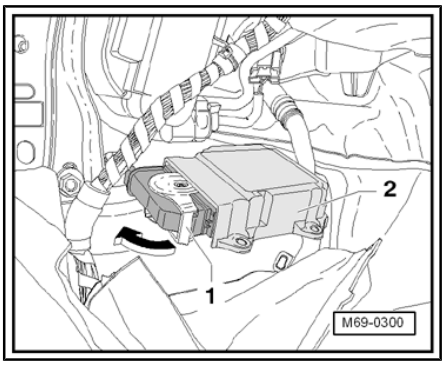

Note

For greater clarity, centre console is not shown in figure.

– Remove the three nuts -3- (9 Nm).

Downloaded from www.Manualslib.com manuals search engine

– Remove control unit from vehicle.

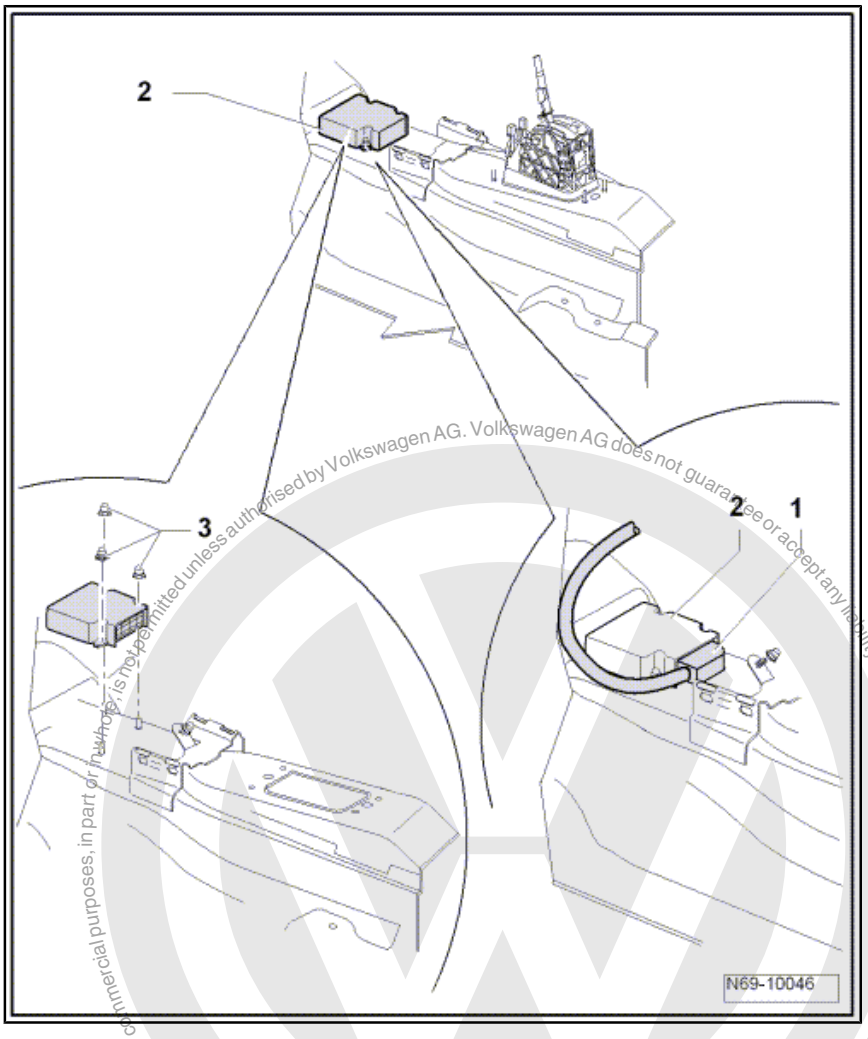

4.8.2 Installing

– Install in reverse order of removal.

– Switch ignition on.

> ⚠ **WARNING**
>
> ***Ensure that nobody is in vehicle.***

– Reconnect vehicle battery ⇒ Electrical system; Rep. Gr. 27 ; Disconnecting and reconnecting battery .

– If airbag control unit -J234- was renewed, it must be coded ⇒ “4.23 Adapting components”, page 147 .

Protected by copyright. Copying for private or commercial purposes, in part or in whole, is not permitted unless authorised by Volkswagen AG. Volkswagen AG does not guarantee or accept any liability with respect to the correctness of information in this document. Copyright by Volkswagen AG.

Downloaded from www.Manualslib.com manuals search engine

4.9 Removing and installing airbag unit on driver side (Jetta 2005 ▸, Golf Variant 2007 ▸)

4.9.1 “Advanced Airbag System” (only for USA/Canada)

The “Advanced Airbag System” has an airbag module with two airbag stages which are triggered depending on the severity of the accident. If the accident is minor the 2nd stage is not triggered.

WARNING

- *Observe the general safety regulations when working on airbag, belt tensioner and battery isolator units (pyrotechnic components)* *⇒ page 89*
- *Airbag modules where only the first stage has triggered can cause serious injuries if the second stage triggers.*
- *Observe the special instructions for driver and front passenger airbags* *⇒ page 112* *.*

A way to check whether the 2nd stage has been triggered without doubt is not currently available. For this reason, the airbag modules mentioned should be disposed of through the correct channels in their original packaging in accordance with local legislation governing such materials. Contact your importer if in any doubt.

WARNING

Airbag units that have not been triggered should not be disposed of via normal commercial waste systems!

Note

- *Removal and installation of the airbag unit is described for the multifunction steering wheel.*
- *The screwdriver mentioned in the following sequences should have a blade width of approx. 7 mm.*

4.9.2 Removing

WARNING

- *Observe the general safety regulations when working on airbag, belt tensioner and battery isolator units (pyrotechnic components)* *⇒ page 89*
- *Airbag modules where only the first stage has triggered can cause serious injuries if the second stage triggers.*
- *Observe the special instructions for driver and front passenger airbags* *⇒ page 112* *.*

– Disconnect vehicle battery ⇒ Electrical system; Rep. Gr. 27 ; Disconnecting and reconnecting battery .

Downloaded from www.Manualslib.com manuals search engine

- Move steering wheel to highest position.
- Extend steering wheel as far as possible into passenger compartment.
- Turn steering wheel to position in illustration.
- Insert a screwdriver into hole in back of steering wheel to stop (approx. 8 mm).
- Turn screwdriver in direction of drivers door -arrow-. This action releases airbag unit fastener on right side of steering wheel.
- Turn steering wheel 180° and release airbag unit fastener on left side of steering wheel as described.
- Turn steering wheel back through 90° to middle position.
- Remove airbag unit from steering wheel.

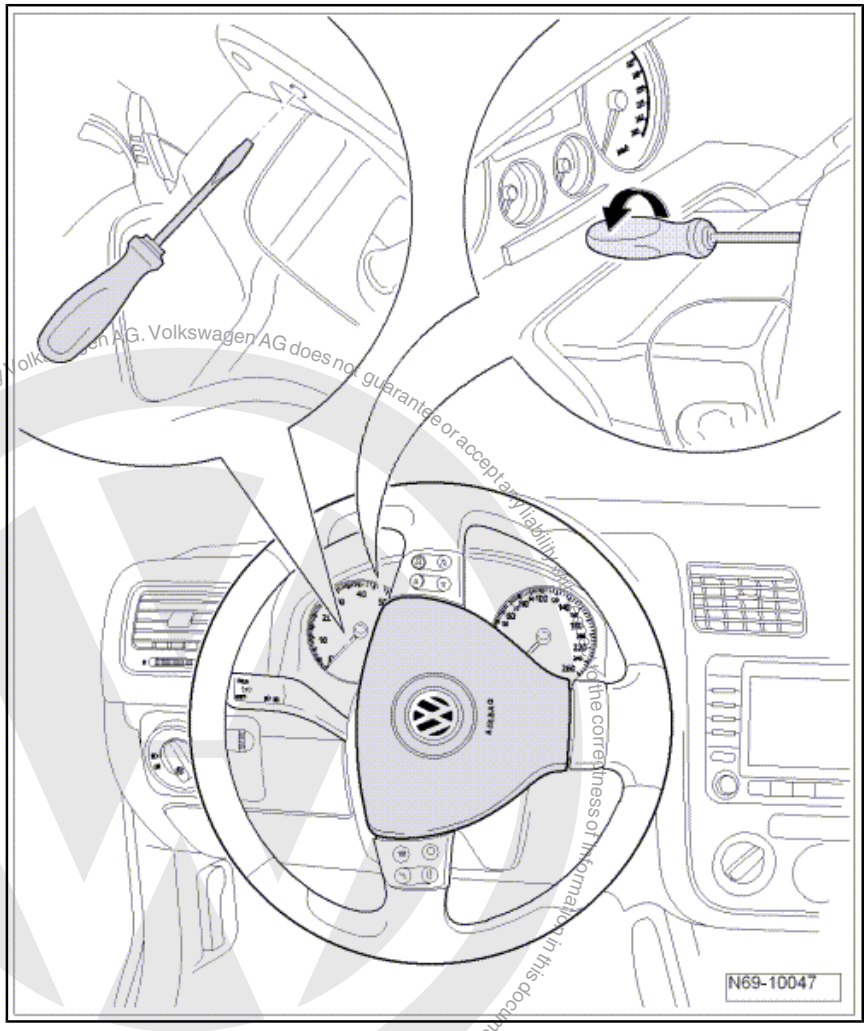

Protected by copyright. Copying for private or commercial purposes, in part or in whole, is not permitted unless authorised by Volkswagen AG. Volkswagen AG does not guarantee or accept any liability with respect to the correctness of the information in this document. Copyright by Volkswagen AG.

Downloaded from www.Manualslib.com manuals search engine

© Volkswagen AG, does not guarantee or accept any liability with respect to the correctness of information in this document. Copyright by Volkswagen AG. Protected by copyright. Copying for private or commercial purposes, in part or in whole, is not permitted unless authorised by Volkswagen AG.

WARNING

Electrostatic discharges may result in unintentional triggering of airbag. Therefore, the mechanic must electrostatically discharge him/herself before disconnecting wiring. This can be done by briefly touching the body or striker plate of the door.

– Operate connector locking device and pull connector -1- off.

Note

This connector -1- is only installed on vehicles with a multifunction steering wheel.

– Release connector locking device in direction of -arrow- and pull off airbag connector -2-.

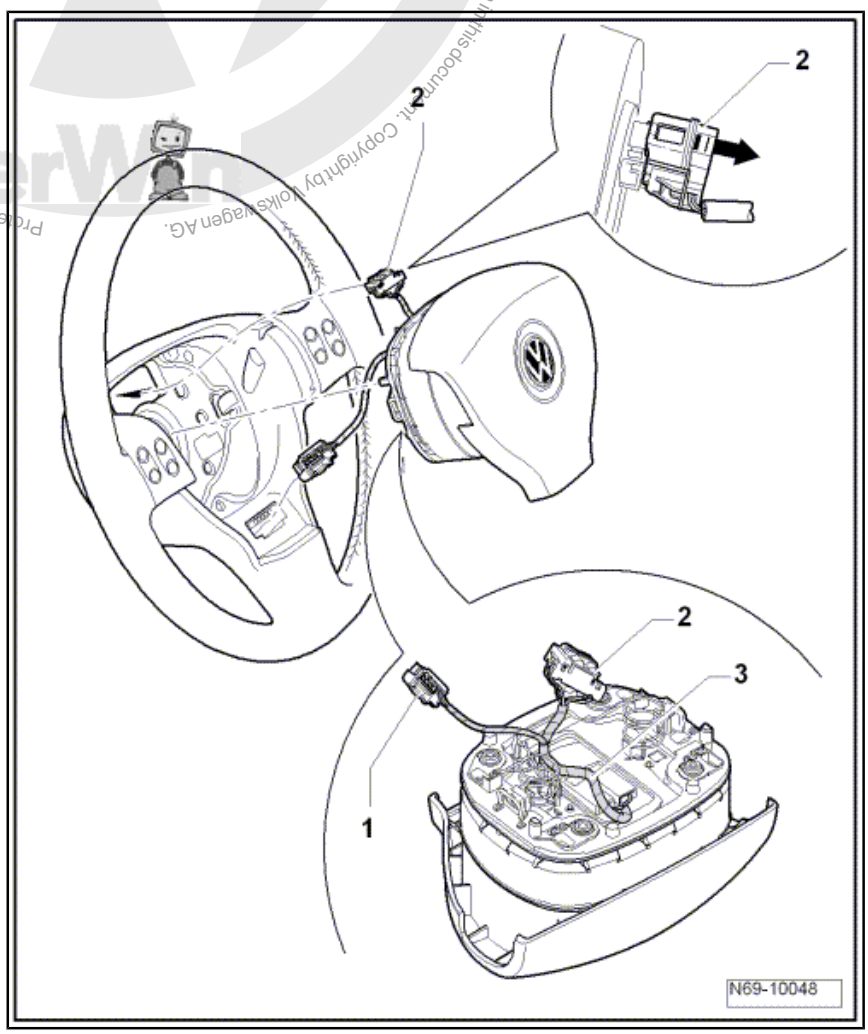

4.9.3 Installing

– Check that wiring harness -3- is routed as shown in figure.

– Insert airbag connector -2- into connector coupling. The airbag connector must audibly engage.

Downloaded from www.Manualslib.com manuals search engine

– Insert connector -1- into connector coupling (only vehicles with a multifunction steering wheel).
– Press airbag unit into steering wheel.
– Check that airbag unit is engaged on left and right sides in steering wheel.

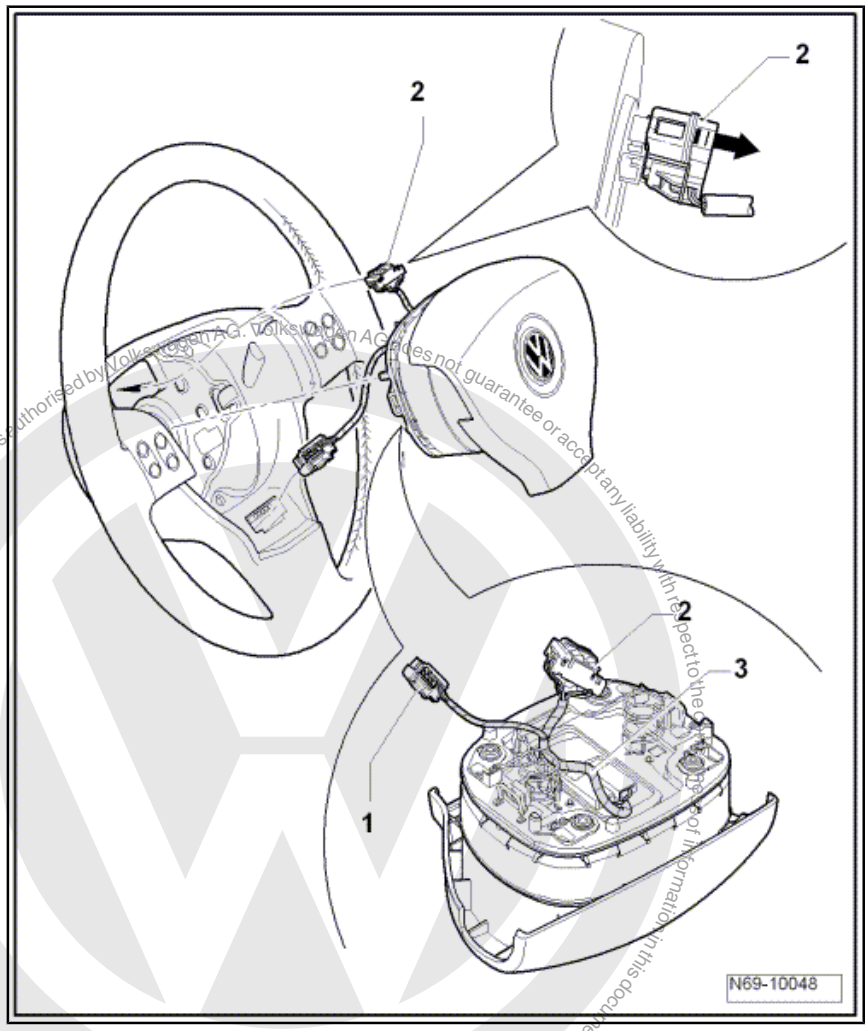

– Switch ignition on.

> **WARNING**
>
> *Ensure that nobody is in vehicle.*

– Reconnect vehicle battery ⇒ Electrical system; Rep. Gr. 27 ; Disconnecting and reconnecting battery .

Protected by copyright. Copying for private or commercial purposes, in part or in whole, is not permitted unless authorised by Volkswagen AG. Volkswagen AG does not guarantee or accept any liability with respect to the correctness of information in this document. Copyright by Volkswagen AG.

Downloaded from www.Manualslib.com manuals search engine

4.10 Removing and installing airbag unit on driver side (Jetta 2010 ▸, Golf Variant 2010 ▸)

Note

- *Removal and installation of the airbag unit is described for the multifunction steering wheel.*
- *The screwdriver mentioned in the following activities should be about 175 mm long and have a blade width of about 7 mm.*

Removing

WARNING

- ***Observe the general safety regulations when working on airbag, belt tensioner and battery isolator units (pyrotechnic components)*** ***⇒ page 89***
- ***Observe the special instructions for driver and front passenger airbags*** ***⇒ page 112*** ***.***

– Disconnect vehicle battery ⇒ Electrical system; Rep. Gr. 27 ; Disconnecting and reconnecting battery .

– Move steering wheel to lowest position.

– Extend steering wheel as far as possible into passenger compartment.

– Turn steering wheel to position in illustration.

– Insert a screwdriver into hole in back of steering wheel to stop (approx. 8 mm).

– Turn screwdriver towards driver's door -arrow-. This releases airbag unit fastener on right side of steering wheel.

Note

When a multifunction steering wheel is not fitted, once fasteners have been operated pull upper edge of airbag out of steering wheel.

– Turn steering wheel 180° and release airbag unit fastener on left side of steering wheel as described.

Note

When a multifunction steering wheel is not fitted, once fasteners have been operated pull upper edge of airbag out of steering wheel.

– Turn steering wheel back through 90° to middle position.

– Remove airbag unit from steering wheel.

Protected by copyright. Copying for private or commercial purposes, in part or in whole, is not permitted unless authorised by Volkswagen AG. Volkswagen AG does not guarantee or accept any liability with respect to the correctness of information in this document. Copyright by Volkswagen AG.

Downloaded from www.Manualslib.com manuals search engine

Protected by copyright. Copying for private or commercial purposes, in part or in whole, is not permitted unless authorised by Volkswagen AG. Volkswagen AG does not guarantee or accept any liability with respect to the correctness of information

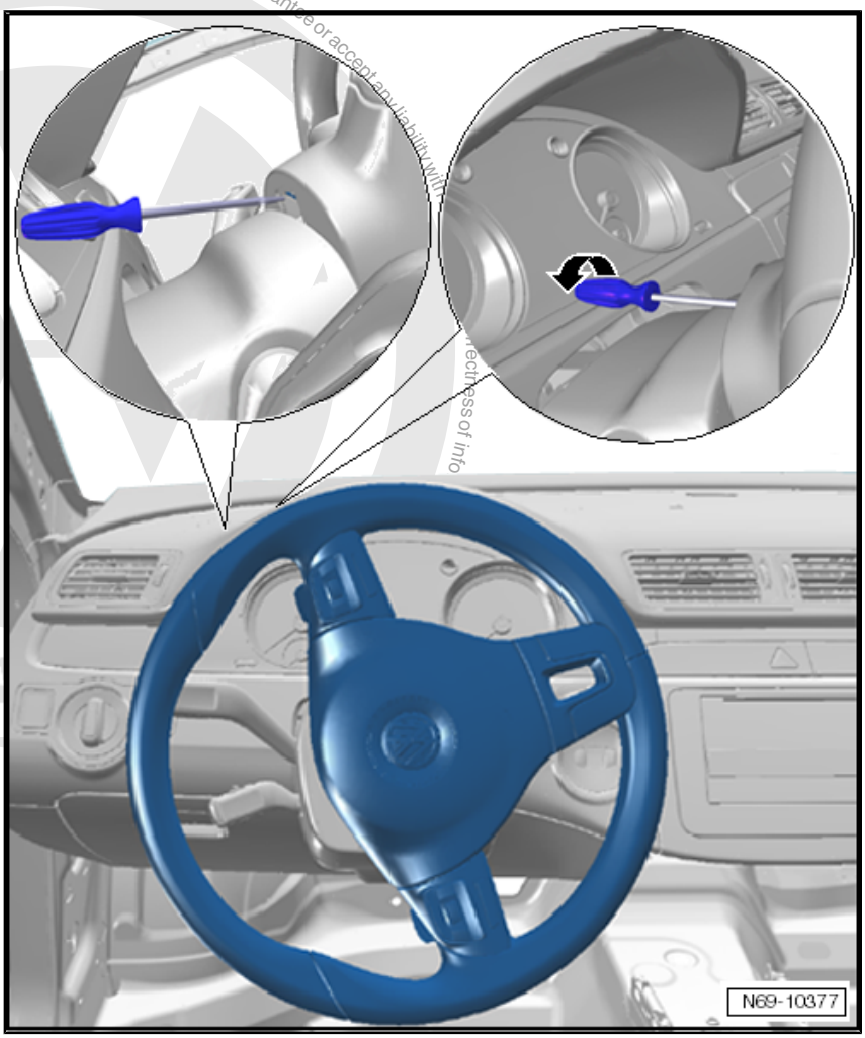

WARNING

Electrostatic discharges may result in unintentional triggering of airbag. Therefore, the mechanic must electrostatically discharge him/herself before disconnecting the igniter and earth wires. This can be done by briefly touching the body or striker plate of the door.

– Release connector locking device and pull off airbag connector -2-.

– Operate connector locking device and pull connector -1- off. This procedure is only necessary on multifunction steering wheels.

Downloaded from www.Manualslib.com manuals search engine

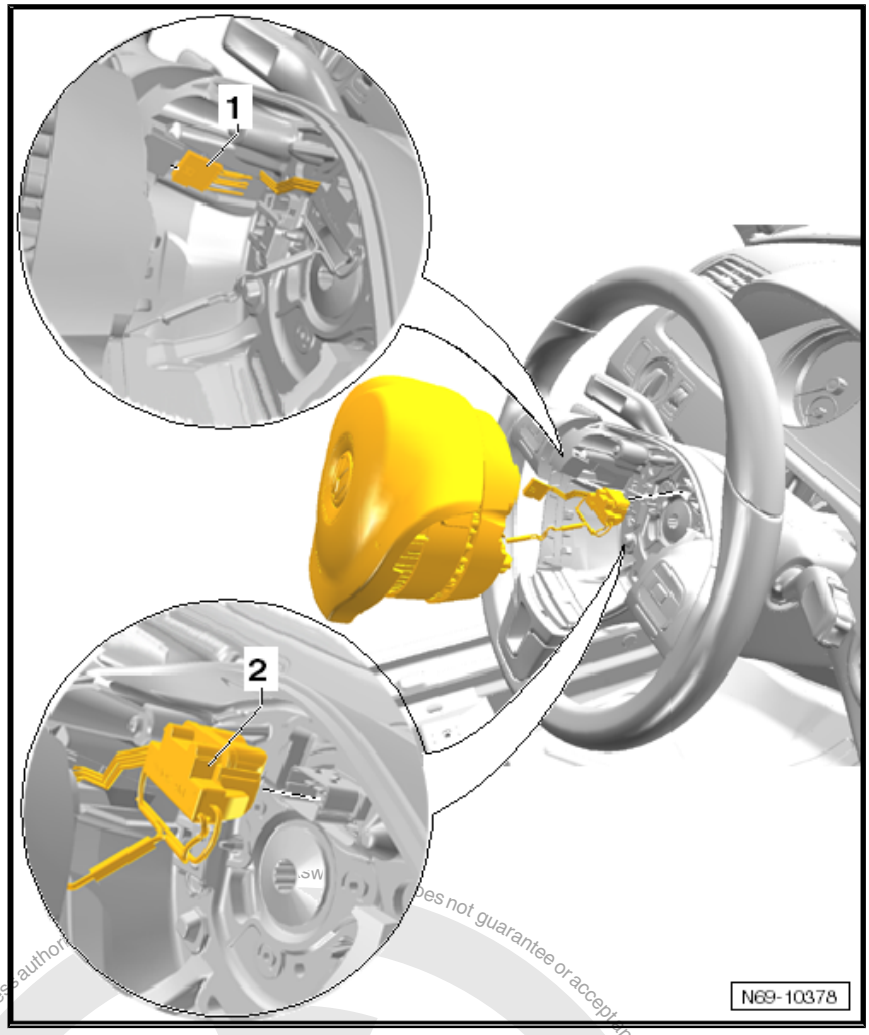

Installing

- Insert airbag connector -2- into connector coupling. The airbag connector must audibly engage.
- Insert connector -1- into connector coupling. This procedure is only necessary on multifunction steering wheels.
- Press airbag unit into steering wheel.
- Check that airbag unit is engaged on left and right sides in steering wheel.

Protected by copyright. Copying for private or commercial purposes, in any form, whole or in part, is not permitted unless authorised. Copyright by Volkswagen AG. does not guarantee or accept any liability with respect to the correctness of information in this document.

Downloaded from www.Manualslib.com manuals search engine

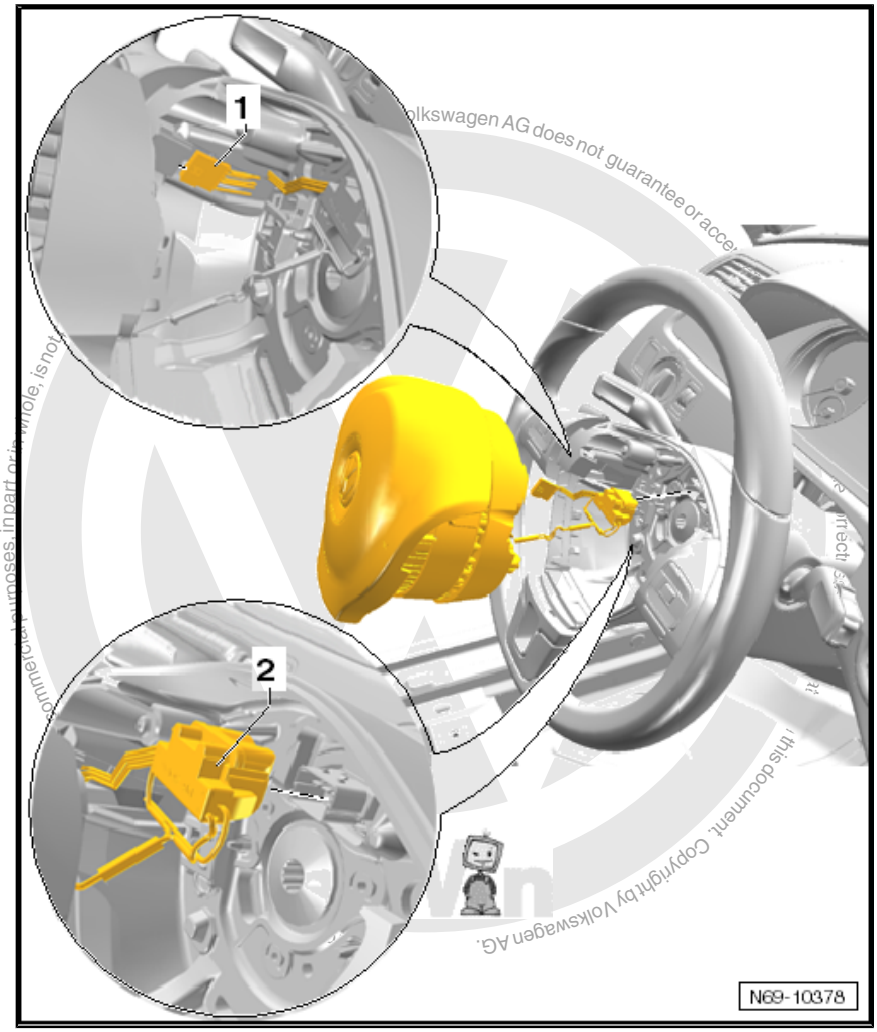

– Switch ignition on.

> **WARNING**
>
> *Ensure that nobody is in vehicle.*

– Reconnect vehicle battery ⇒ Electrical system; Rep. Gr. 27 ; Disconnecting and reconnecting battery .

4.11 Removing and installing airbag coil connector and return spring with slip ring -F138-

By virtue of its design, the airbag coil connector and return spring with slip ring is part of the steering column switch.

⇒ Electrical system; Rep. Gr. 94 ; Steering column switch .

4.12 Removing and installing key operated switch to deactivate front passenger airbag -E224-

Removal and installation is described in repair group 96.

Downloaded from www.Manualslib.com manuals search engine

⇒ Electrical system; Rep. Gr. 96

4.13 Removing and installing knee airbag (Jetta 2010 ▸, Golf Variant 2010 ▸)

Note

Knee airbag is installed above pedal cluster.

Removing

WARNING

Observe the general safety regulations when working on airbag, belt tensioner and battery isolator units (pyrotechnic components) ***⇒ page 89***

– Disconnect vehicle battery ⇒ Electrical system; Rep. Gr. 27 ; Disconnecting and reconnecting battery .

WARNING

Electrostatic discharges may result in unintentional triggering of airbag. Therefore, the mechanic must electrostatically discharge him/herself before disconnecting the igniter and earth wires. This can be done by briefly touching the body or striker plate of the door.

– Disconnect connector from knee airbag.

Note

The connector is located on the tunnel side (in the direction of travel).

– Remove two nuts each -1- and -3- (9 Nm).

– Remove knee airbag -2- from bracket -4-.

Protected by copyright. Copying for private or commercial purposes, in part or in whole, is not permitted unless authorised by Volkswagen AG. Volkswagen AG does not guarantee or accept any liability with respect to the correctness of information in this document. Copyright by Volkswagen AG.

Downloaded from www.Manualslib.com manuals search engine

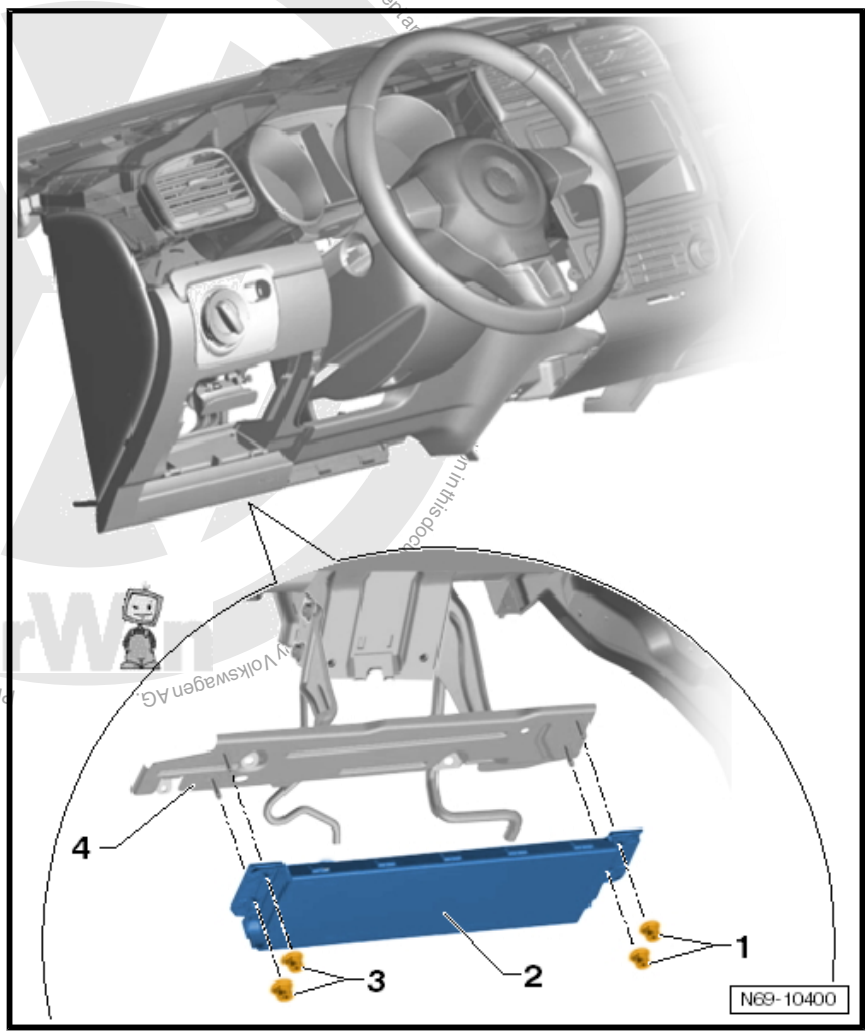

Installing

– Install in reverse order of removal.

> **WARNING**
>
> *Ensure airbag connector engages audibly.*

– Switch ignition on.

> **WARNING**
>
> *Ensure that nobody is in vehicle.*

– Reconnect vehicle battery ⇒ Electrical system; Rep. Gr. 27 ; Disconnecting and reconnecting battery .

Downloaded from www.Manualslib.com manuals search engine

4.14 Removing and installing knee airbag bracket (Jetta 2010 ▸, Golf Variant 2010 ▸), left-hand drive vehicles

Removing

- Disconnect vehicle battery ⇒ Electrical system; Rep. Gr. 27 ; Disconnecting and reconnecting battery .
- Remove dash panel ⇒ page 179 .
- Remove footwell vent on driver side ⇒ Heating, air conditioning; Rep. Gr. 80 ; Repairing heating system; Passenger compartment heating; Removing and installing vents; Removing footwell vent on driver side .
- Remove screw -9- (1.5 Nm) and bracket -8-.
- Remove bolts -3- and -4- (1.5 Nm).
- Remove bolts -1-, -2-, -6- and-7- and remove bracket -5-.

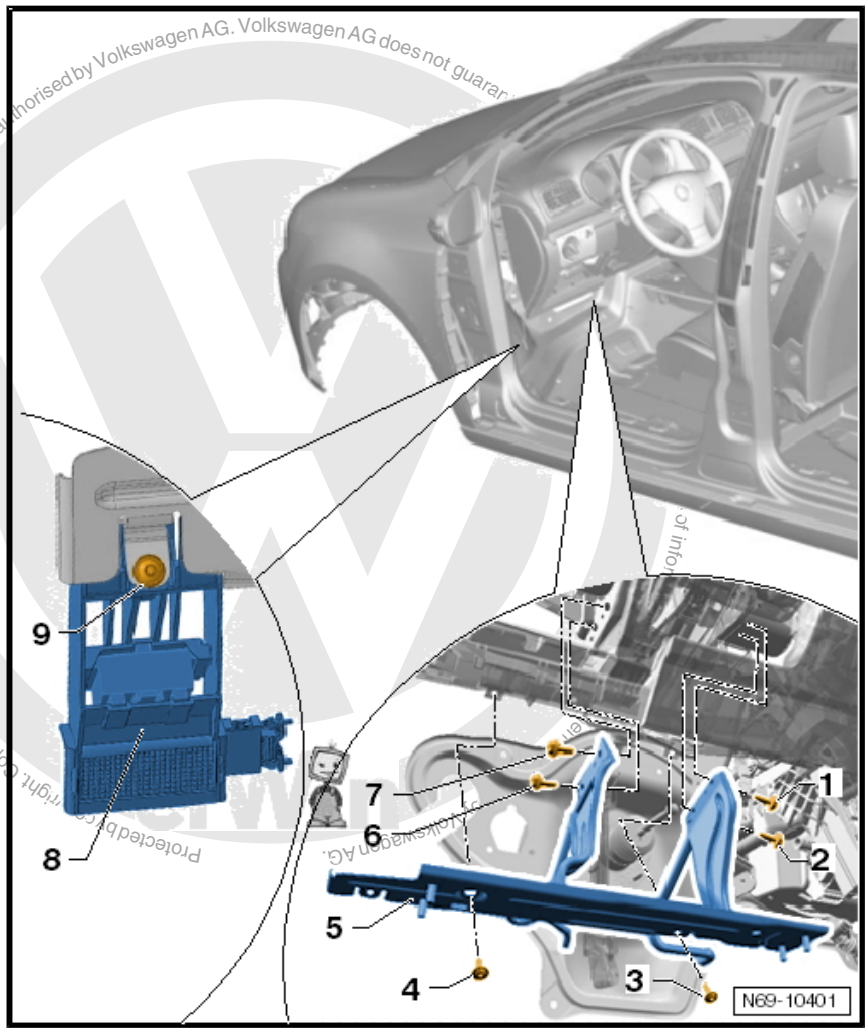

Downloaded from www.Manualslib.com manuals search engine

Installing

WARNING

If a knee airbag bracket is renewed, the paint in the area of the stud and on the contact surfaces of the cross member must be removed. This is absolutely essential to ensure an effective earth connection.

Caution

Adhere to bolting sequence -2-, -6-, -1- and -7- to assure correct installation.

- Secure knee airbag bracket with bolts -2-, -6-, -1- and -7- (9 Nm).
- Further installation is performed in reverse order of removal.

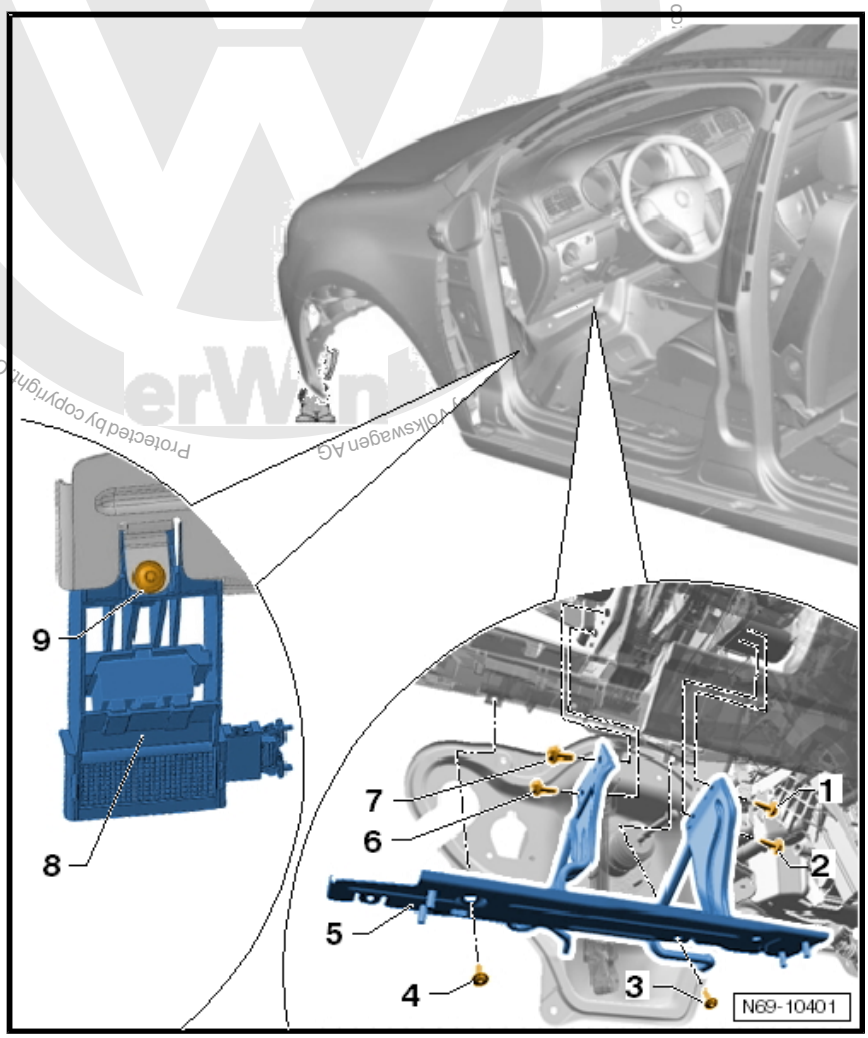

Protected by copyright. Copying for private or commercial purposes, in part or in whole, is not permitted unless authorised by Volkswagen AG. Volkswagen AG does not guarantee or accept any liability with respect to the co

Downloaded from www.Manualslib.com manuals search engine

4.15 Removing and installing knee airbag bracket (Jetta 2010 ▸, Golf Variant 2010 ▸), right-hand drive vehicles

Removing

- Disconnect vehicle battery ⇒ Electrical system; Rep. Gr. 27 ; Disconnecting and reconnecting battery .
- Remove dash panel ⇒ page 179 .
- Remove footwell vent on driver side ⇒ Heating, air conditioning; Rep. Gr. 80 ; Repairing heating system; Passenger compartment heating; Removing and installing vents; Removing footwell vent on driver side .
- Remove screw -1- (1.5 Nm) and bracket -2-.
- Release wiring harness -3- from bracket.
- Unscrew bolts -arrows A- and -arrows B- and remove bracket.

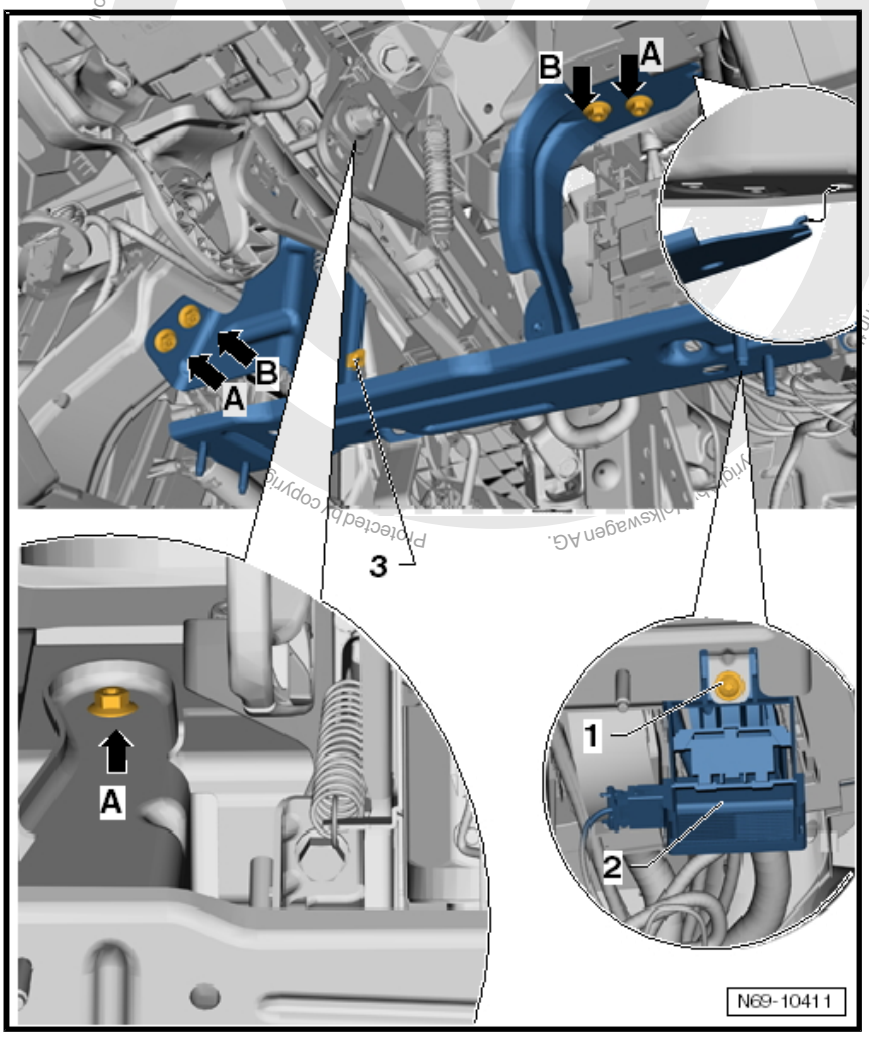

Volkswagen AG. Volkswagen AG does not guarantee or accept any liability with respect to the correctness of information.
Protected by copyright. Copyright by Volkswagen AG.

Downloaded from www.Manualslib.com manuals search engine

Installing

WARNING

If a knee airbag bracket is renewed, the paint in the area of the stud and on the contact surfaces of the cross member must be removed. This is absolutely essential to ensure an effective earth connection.

Caution

To ensure trouble-free installation, screw in the bolts in the order specified: -arrows A- and -arrows B-.

- Secure knee airbag bracket with bolts -arrows A- (9 Nm).
- Secure knee airbag bracket with bolts -arrows B- (9 Nm).
- Further installation is performed in reverse order of removal.

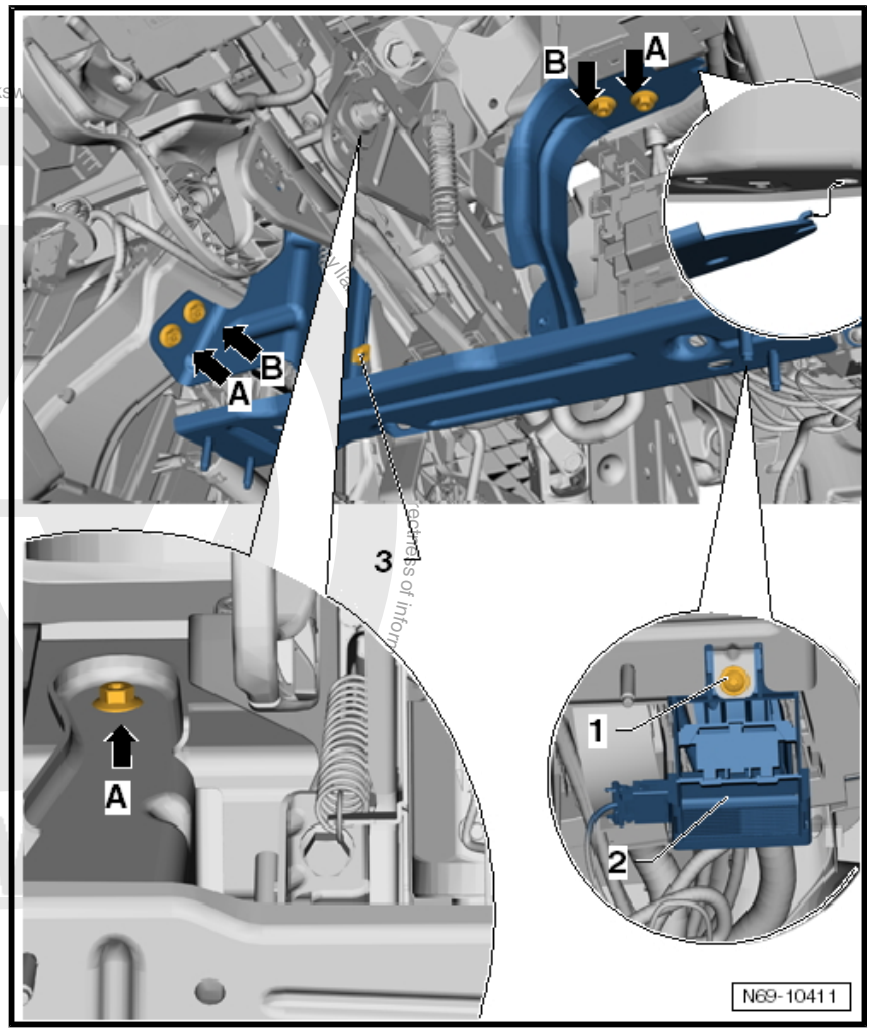

Protected by copyright. Copying for private or commercial purposes, in part or in whole, is not permitted unless authorised by Volkswagen AG. Volks

Downloaded from www.Manualslib.com manuals search engine

4.16 Removing and installing return spring with slip ring

By virtue of its design, the airbag coil connector and return spring with slip ring -F138- is part of the steering column switch.

Removing and installing ⇒ Electrical system; Rep. Gr. 94 ; Steering column switch

4.17 Removing and installing front passenger airbag unit

4.17.1 “Advanced Airbag System” (only for USA/Canada)

The “Advanced Airbag System” has an airbag module with two airbag stages which are triggered depending on the severity of the accident. If the accident is minor the 2nd stage is not triggered.

> ⚠ WARNING
>
> - *Airbag modules where only the first stage has triggered can cause serious injuries if the second stage triggers.*
> - *Observe the general safety regulations when working on airbag, belt tensioner and battery isolator units (pyrotechnic components) ⇒ page 89*
> - *Observe the special instructions for driver and front passenger airbags ⇒ page 112 .*

A way to check whether the 2nd stage has been triggered without doubt is not currently available. For this reason, the airbag modules mentioned should be disposed of through the correct channels in their original packaging in accordance with local legislation governing such materials. Contact your importer if in any doubt.

> ⚠ WARNING
>
> *Airbag units that have not been triggered should not be disposed of via normal commercial waste systems!*

4.17.2 Removing

> ⚠ WARNING
>
> *Observe the general safety regulations when working on airbag, belt tensioner and battery isolator units (pyrotechnic components) ⇒ page 89*
>
> *Observe the special instructions for driver and front passenger airbags ⇒ page 112 .*

– Disconnect vehicle battery ⇒ Electrical system; Rep. Gr. 27 ; Disconnecting and reconnecting battery .

– Remove cover on side of dash panel ⇒ page 54 .

– Remove centre trim for A-pillar ⇒ page 210 .

– Remove centre cover ⇒ page 72 .

Downloaded from www.Manualslib.com manuals search engine

– Remove glove compartment ⇒ page 62 .

WARNING

Electrostatic discharges may result in unintentional triggering of airbag. Therefore, the mechanic must electrostatically discharge him/herself before disconnecting wiring. This can be done by briefly touching the body or striker plate of the door.

– Disconnect wiring harness from front passenger airbag.
– Remove the two bolts -1- (9 Nm).
– Loosen each of the two screws -2- and -3- and unbolt them a maximum of 3 turns.
– Remove bolts -7- (9 Nm) and remove bracket -6-.
– Now remove bolts -2- and -3- (9 Nm).
– Remove front passenger airbag and brackets -4- and -5- from mountings.

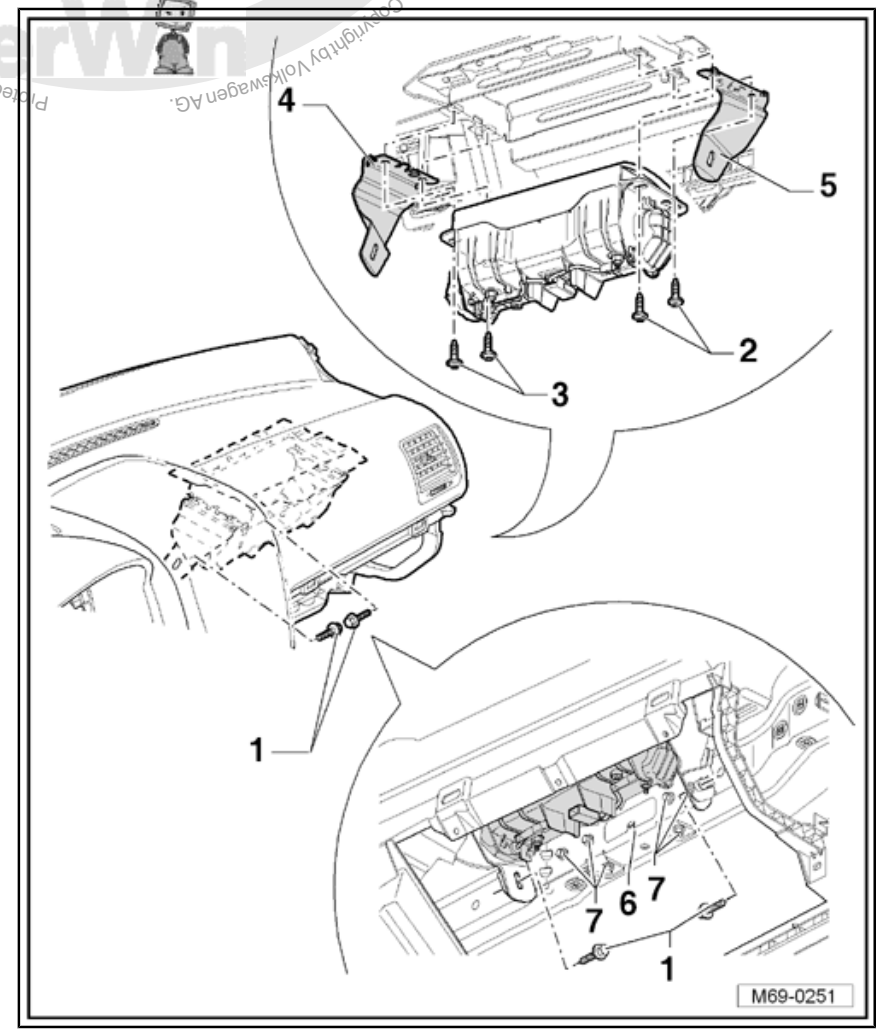

Protected by copyright. Copying for private or commercial purposes, in part or in whole, is not permitted unless authorised by Volkswagen AG. Volkswagen AG does not guarantee or accept any liability with respect to the correctness of information in this document. Copyright by Volkswagen AG.

Downloaded from www.Manualslib.com manuals search engine

4.17.3 Installing

– Install in reverse order of removal.

Note

If the front passenger airbag housing is made of plastic, the bolts -2- and -3- (9 Nm) must be secured using locking fluid D 197 300 A2.

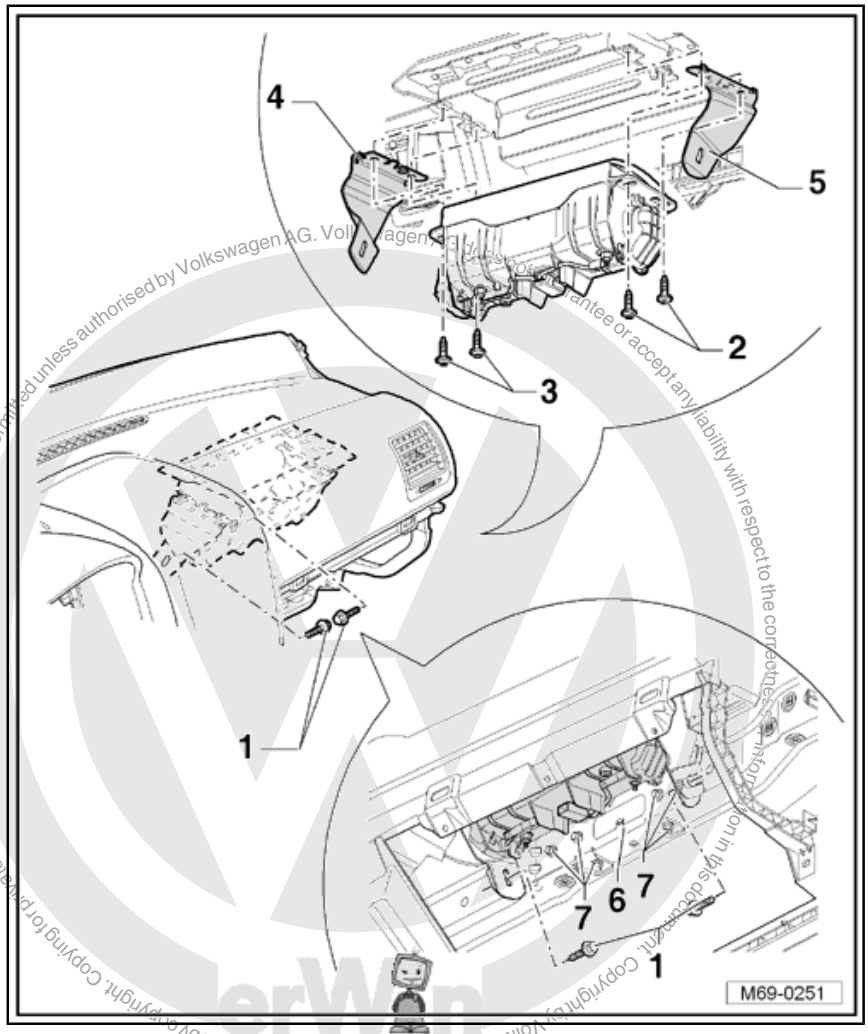

Protected by copyright. Copying for private or commercial purposes, in part or in whole, is not permitted unless authorised by Volkswagen AG. Volkswagen AG does not guarantee or accept any liability with respect to the correctness of information in this document. Copyright by Volkswagen AG.

Check whether an additional earth cable needs to be fitted in the vehicle:

WARNING

If a front passenger airbag is renewed, an additional earth cable may have to be fitted to the vehicle.

Downloaded from www.Manualslib.com manuals search engine

Note

The concept is presented using the example of a one-level airbag module. For the two-level airbag module, the process of determining whether an additional earth cable must be fitted in the vehicle is carried out at the same time.

– Check whether an earth cable is attached to the front passenger airbag housing:

♦ On a front passenger airbag with earth cable -1-, the wiring harness -2- is three-conductor, an additional cable -3- is also attached to the stud -4-.

♦ On a front passenger airbag without earth cable -5- the wiring harness -6- is two-conductor, there is no additional cable attached to the stud -7-.

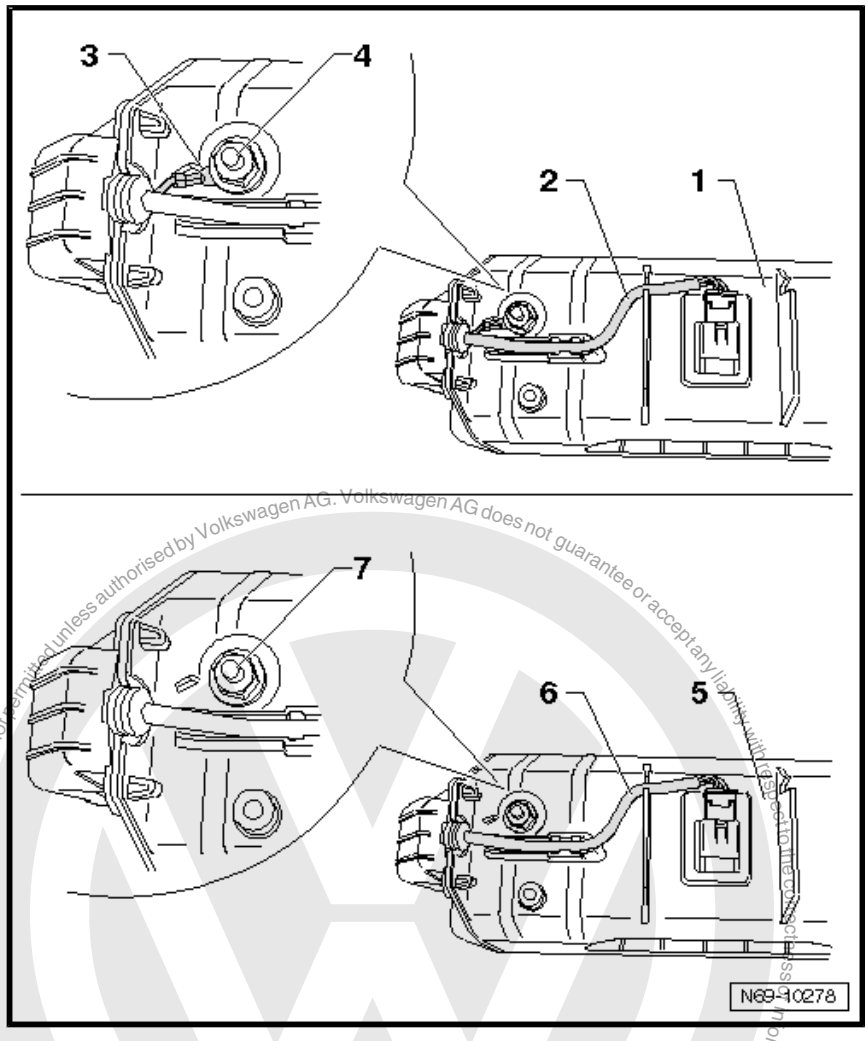

Protected by copyright. Copying for private or commercial purposes, in part or in whole, is not permitted unless authorised by Volkswagen AG. Volkswagen AG does not guarantee or accept any liability with respect to the correctness of information in this document. Copyright by Volkswagen AG.

Downloaded from www.Manualslib.com manuals search engine

Routing an additional earth wire in the vehicle if the front passenger airbag does not have an earth cable

Note

For the following work use a cable (wire cross section 1 mm, length 600 mm) from the Wiring harness repair set -VAS 1978- or Wiring harness repair set -VAS 1978A- .

– Secure one end of the earth cable with the bolt -1- on the right hand side of the front passenger airbag.

– Fit the earth cable properly up to the right-hand side of the front passenger footwell.

Note

If needed, extend the earth cable with the appropriate materials from Wiring harness repair set -VAS 1978- or Wiring harness repair set -VAS 1978A- .

– Connect the other end of the earth cable to the earth bolt -2-.

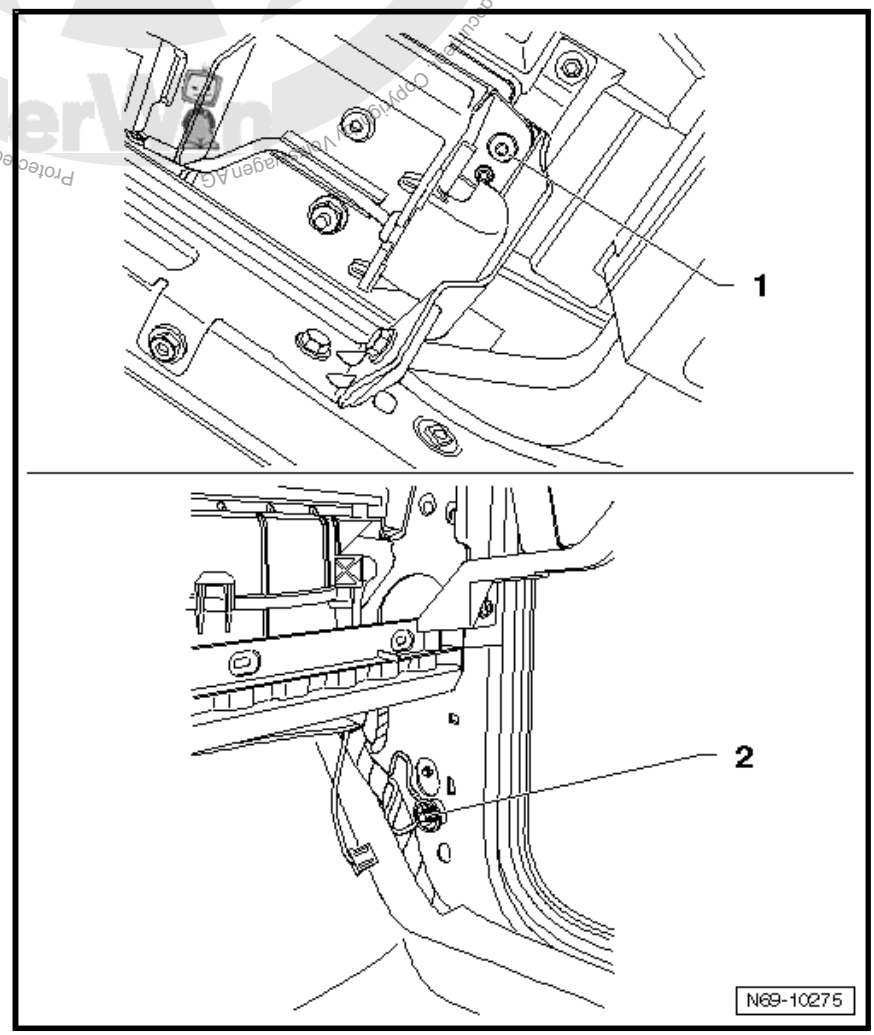

– Switch ignition on.

Downloaded from www.Manualslib.com manuals search engine

> **WARNING**
>
> ***Ensure that nobody is in vehicle.***

– Reconnect vehicle battery ⇒ Electrical system; Rep. Gr. 27 ; Disconnecting and reconnecting battery .

4.18 Removing and installing side airbags on driver and front passenger sides

Note

Removal and installation are described for the left vehicle side. Follow same instructions for the right side as appropriate.

4.18.1 Removing

> **WARNING**
>
> ***Observe the general safety regulations when working on airbag, belt tensioner and battery isolator units (pyrotechnic components) ⇒ page 89***

– Disconnect vehicle battery ⇒ Electrical system; Rep. Gr. 27 ; Disconnecting and reconnecting battery .

– Remove front left seat ⇒ page 251 .

– Remove right trim on seat:

♦ Seat with no folding backrest ⇒ page 257 .

♦ Seat with folding backrest ⇒ page 259 .

Vehicles with manually adjustable seat

– Remove left trim on seat:

♦ Seat with no folding backrest ⇒ page 255 .

♦ Seat with folding backrest ⇒ page 258 .

Vehicles with electrically adjustable seat

– Remove left trim on electrically adjustable seat ⇒ page 261 .

All vehicles

– Remove front seat backrest ⇒ page 268 .

– Remove cover and padding from front seat backrest ⇒ page 294 .

– Disconnect wiring harness -1- from backrest frame.

– Remove bolt -2- (9 Nm).

– Remove side airbag -3- from mounting in backrest frame.

Protected by copyright. Copying for private or commercial purposes in part or in whole is not permitted unless authorised by Volkswagen AG. Volkswagen AG does not guarantee or accept any liability with respect to the correctness of information in this document. Copyright by Volkswagen AG.

Downloaded from www.Manualslib.com manuals search engine

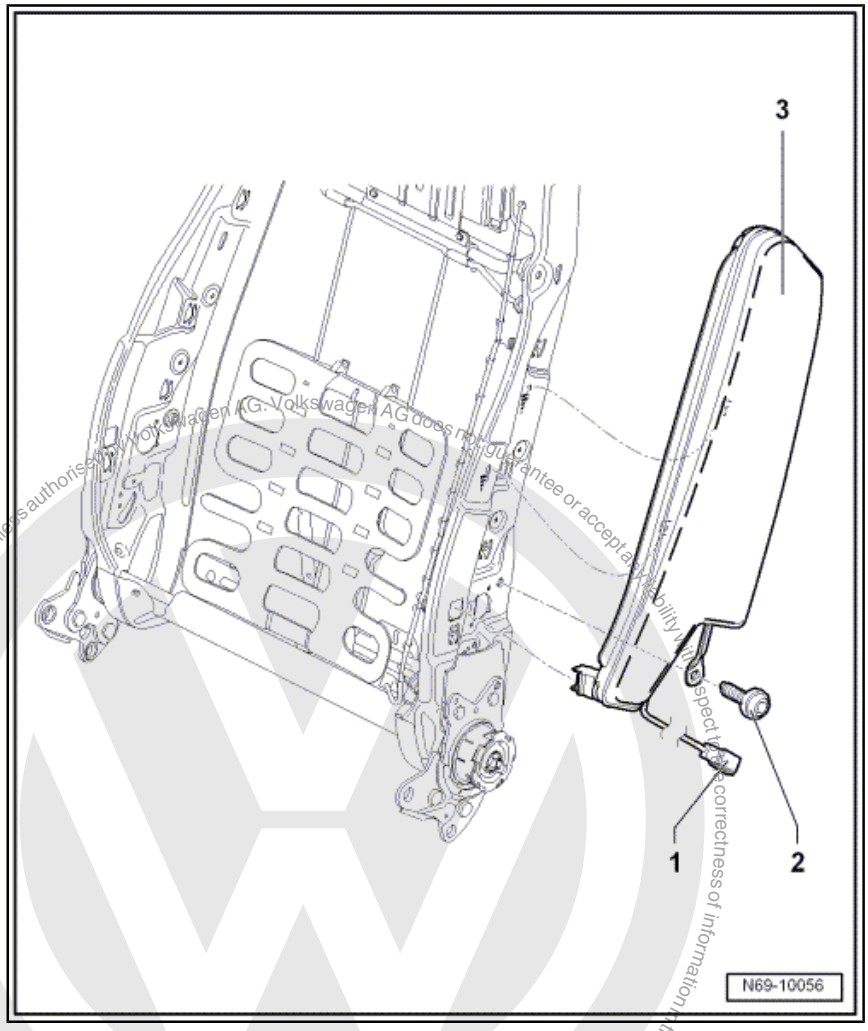

Protected by copyright. Copying for private or commercial purposes, in part or in whole, is not permitted unless authorised by Volkswagen AG. Volkswagen AG does not guarantee or accept any liability with respect to the correctness of information in this document. Copyright by Volkswagen AG.

4.18.2 Installing

– Install in reverse order of removal.
– Switch ignition on.

> ⚠ **WARNING**
>
> ***Ensure that nobody is in vehicle.***

– Reconnect vehicle battery ⇒ Electrical system; Rep. Gr. 27 ; Disconnecting and reconnecting battery .

4.19 Removing and installing rear side-air-bag

Note

Removal and installation is described for right side of vehicle.
Follow same instructions for left side as appropriate.

Downloaded from www.Manualslib.com manuals search engine

4.19.1 Removing

WARNING

Observe the general safety regulations when working on airbag, belt tensioner and battery isolator units (pyrotechnic components) ⇒ page 89

– Disconnect vehicle battery ⇒ Electrical system; Rep. Gr. 27 ; Disconnecting and reconnecting battery .

– Remove side padding with side airbag -1- ⇒ page 287 .

– Remove the two bolts -2- (9 Nm).

Note

- *The bolts are microencapsulated and must be renewed each time they are loosened.*
- *Before new bolts are installed, the threads of the corresponding holes must be cleaned.*

– Disconnect rear side airbag connector coupling -3- from mounting in side padding -1-.

– Remove rear side airbag -3- from side padding.

Protected by copyright. Copying for private or commercial purposes, in part or in whole, is not permitted unless authorised by Volkswagen AG. Volkswagen AG does not guarantee or accept any liability with respect to the correctness of information in this document. Copyright by Volkswagen AG.

Downloaded from www.Manualslib.com manuals search engine

Protected by copyright. Copying for private or commercial purposes, in part or in whole, is not permitted unless authorised by Volkswagen AG. Volkswagen AG does not guarantee or accept any liability with respect to the correctness of information in this document. Copyright by Volkswagen AG

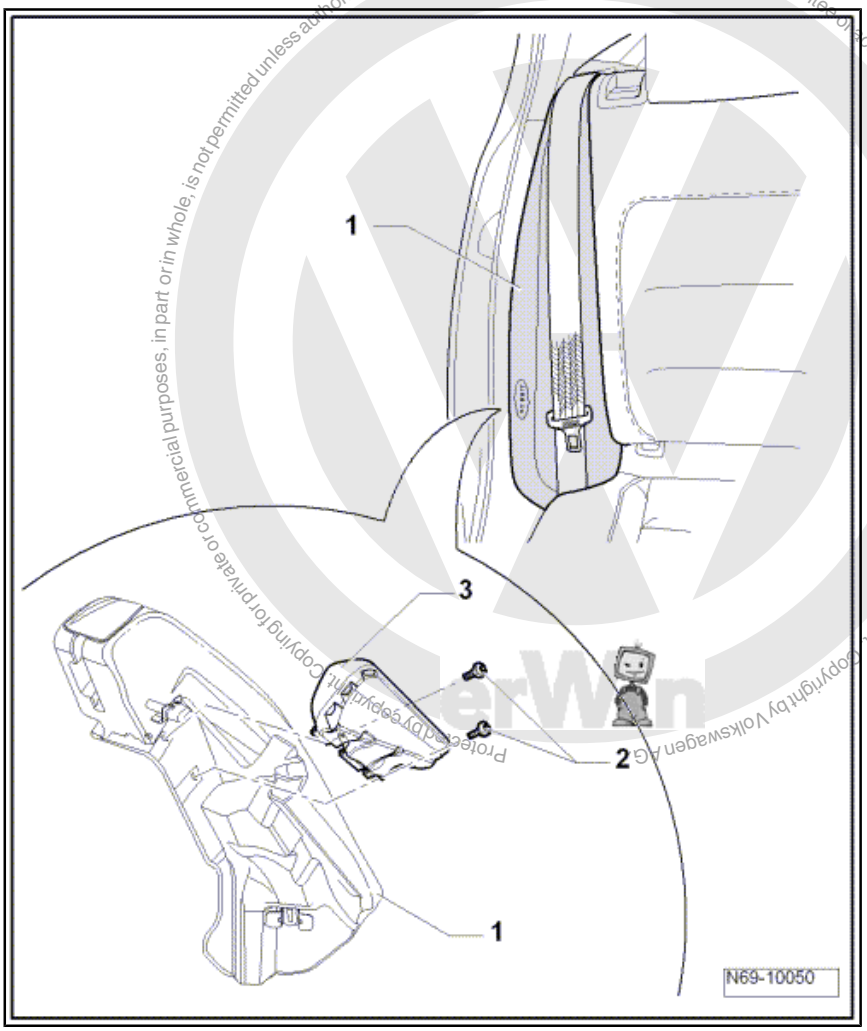

4.19.2 Installing

– Install in reverse order of removal.

– Switch ignition on.

> ⚠ **WARNING**
>
> ***Ensure that nobody is in vehicle.***

– Reconnect vehicle battery ⇒ Electrical system; Rep. Gr. 27 ; Disconnecting and reconnecting battery .

4.20 Removing and installing curtain airbag on driver and passenger side (saloon)

Note

Removal and installation is described for right side of vehicle.
Follow same instructions for left side as appropriate.

Downloaded from www.Manualslib.com manuals search engine

4.20.1 Removing

WARNING

- *Observe the general safety regulations when working on airbag, belt tensioner and battery isolator units (pyrotechnic components)* *⇒ page 89* .
- *Observe the special instructions for curtain airbag modules* *⇒ page 112* .

– Open sliding/tilting sunroof, if fitted.

– Disconnect vehicle battery ⇒ Electrical system; Rep. Gr. 27 ; Disconnecting and reconnecting battery .

– Remove sun visors ⇒ page 73 .

– Remove roof grab handles ⇒ page 81 .

– Remove lights and switches in moulded headliner ⇒ Electrical system; Rep. Gr. 96 .

– Remove rear roof end strip ⇒ page 238 .

– Remove upper trims on A-pillar ⇒ page 209 .

– Remove upper trims on B-pillar ⇒ page 213 .

– Remove C-pillar trims ⇒ page 217 .

Caution

Carry out following sequences using extreme care so as not to damage the moulded headliner.

– Lower moulded headliner (moulded headliner is not removed from the vehicle, the front seats and front passenger door are not removed) ⇒ page 241 .

WARNING

Electrostatic discharges may result in unintentional triggering of airbag. Therefore, the mechanic must electrostatically discharge him/herself before disconnecting wiring. This can be done by briefly touching the body or striker plate of the door.

– Disconnect connections -1- on curtain airbag.

– Remove bolts -2- (4.5 Nm).

Note

The bolts -2- must be renewed.

– Remove cap nut -3- (9 Nm).

– Release all curtain airbag fastenings from body.

– Pull gas generator -4- off studs -5- on body.

– Take curtain airbag out of vehicle with the aid of a second mechanic.

Protected by copyright. Copying for private or commercial purposes, in part or in whole, is not permitted unless authorised by Volkswagen AG. Volkswagen AG does not guarantee or accept any liability with respect to the correctness of information in this document. Copyright by Volkswagen AG.

Downloaded from www.Manualslib.com manuals search engine

Protected by copyright. Copying for private or commercial purposes, in part or in whole, is not permitted unless authorised by Volkswagen AG. Volkswagen AG does not guarantee or accept any liability with respect to the correctness of information in this document. Copyright by Volkswagen AG.

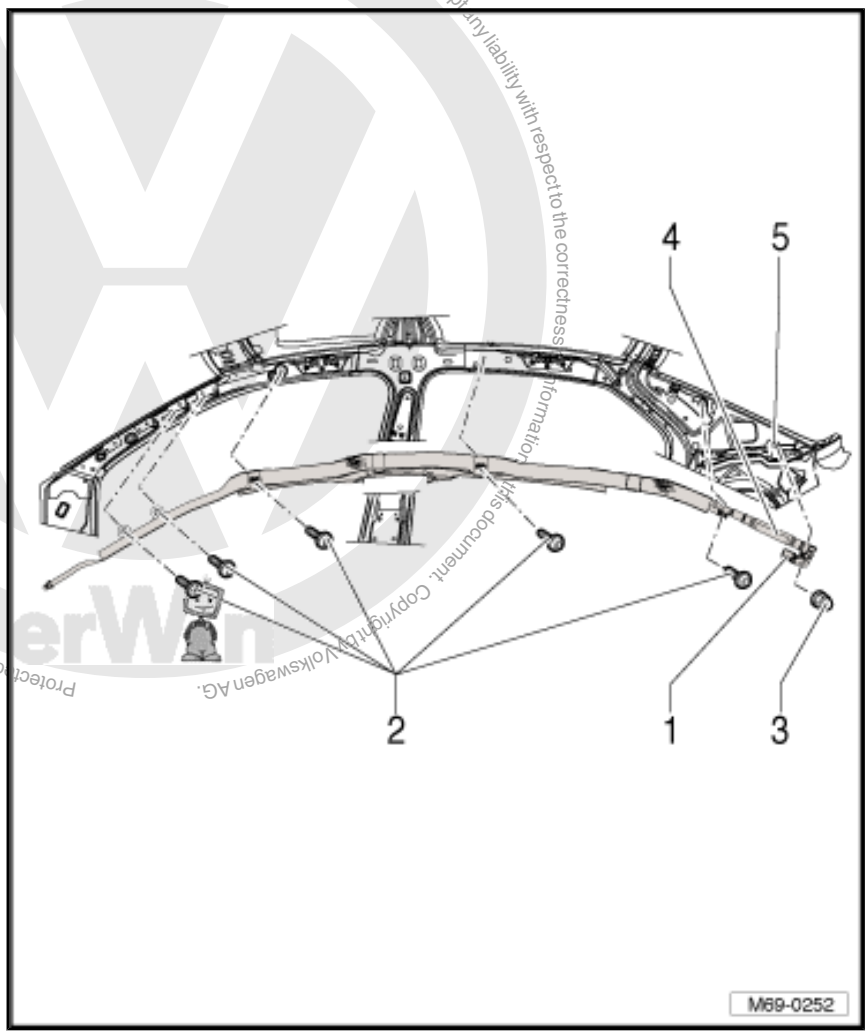

4.20.2 Installing

– Install in reverse order of removal.

– Switch ignition on.

> ⚠ **WARNING**
>
> ***Ensure that nobody is in vehicle.***

– Reconnect vehicle battery ⇒ Electrical system; Rep. Gr. 27 ; Disconnecting and reconnecting battery .

4.21 Removing and installing curtain airbag on driver and passenger side (Variant)

Note

Removal and installation is described for right side of vehicle.
Follow same instructions for left side as appropriate.

Downloaded from www.Manualslib.com manuals search engine

Protected by copyright. Copying for private or commercial purposes, in part or in whole, is not permitted unless authorised by Volkswagen AG. Volkswagen AG does not guarantee or accept any liability with respect to the correctness of information in this document. Copyright by Volkswagen AG.

4.21.1 Removing

WARNING

- *Observe the general safety regulations when working on airbag, belt tensioner and battery isolator units (pyrotechnic components) ⇒ page 89 .*
- *Observe the special instructions for curtain airbag modules ⇒ page 112 .*

– Open panorama sliding roof, if fitted.

– Disconnect vehicle battery ⇒ Electrical system; Rep. Gr. 27 ; Disconnecting and reconnecting battery .

– Remove sun visors ⇒ page 73 .

– Remove roof grab handles ⇒ page 81 .

– Remove lights and switches in moulded headliner ⇒ Electrical system; Rep. Gr. 96 .

– Remove rear roof end strip ⇒ page 240 .

– Remove upper trims on A-pillar ⇒ page 209 .

– Remove upper trims on B-pillar ⇒ page 213 .

– Remove C-pillar trims ⇒ page 218 .

– Remove D-pillar trims ⇒ page 219 .

Caution

Carry out following sequences using extreme care so as not to damage the moulded headliner.

– Lower moulded headliner (moulded headliner is not removed from the vehicle, the front seats and front passenger door are not removed) ⇒ page 245 .

WARNING

Electrostatic discharges may result in unintentional triggering of airbag. Therefore, the mechanic must electrostatically discharge him/herself before disconnecting wiring. This can be done by briefly touching the body or striker plate of the door.

– Disconnect connections -1- on curtain airbag.

– Remove bolts -2- (4.5 Nm).

Note

The bolts -2- must be renewed.

– Release all curtain airbag fastenings from body.

– Pull plugs -3- out of body (A-pillar).

– Take curtain airbag and gas generator -4- out of vehicle with the aid of a second mechanic.

Downloaded from www.Manualslib.com manuals search engine

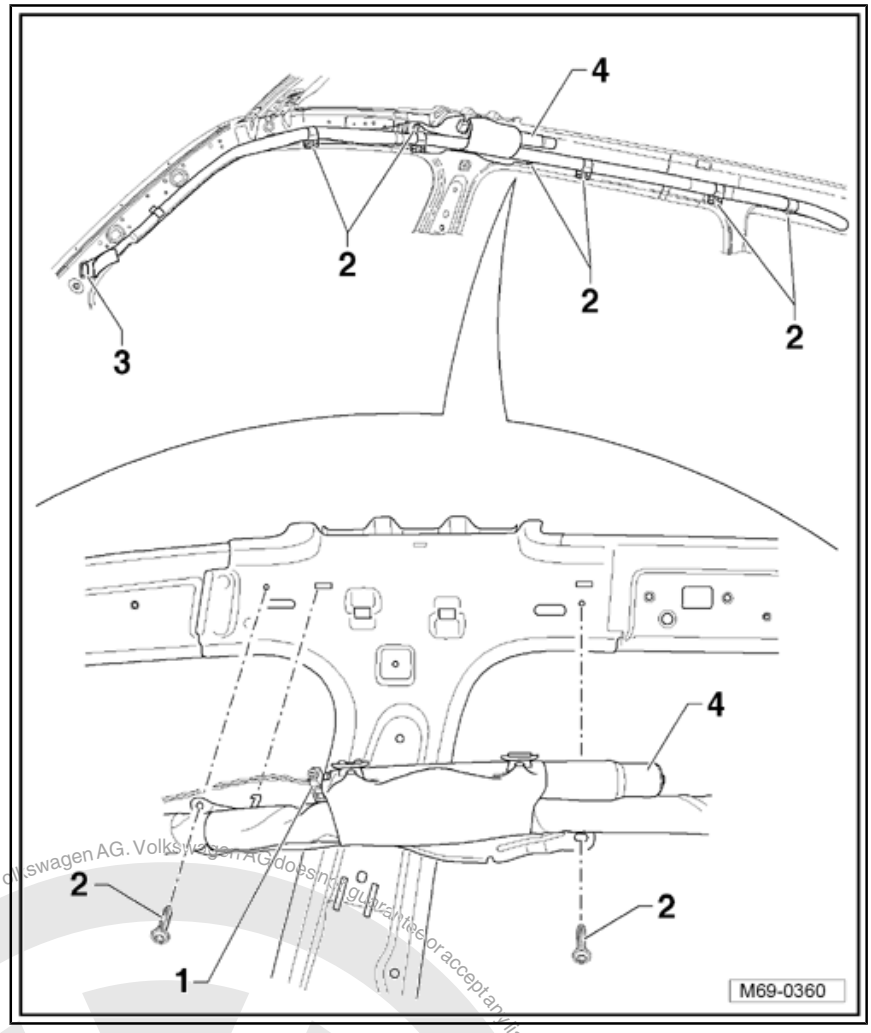

4.21.2 Installing

– Install in reverse order of removal.

– Switch ignition on.

> ⚠ **WARNING**
>
> ***Ensure that nobody is in vehicle.***

– Reconnect vehicle battery ⇒ Electrical system; Rep. Gr. 27 ; Disconnecting and reconnecting battery .

4.22 Removing and installing seat occupied sensor, front passenger side -G128-

> ⚠ **WARNING**
>
> ***If the seat occupied sensor, front passenger side -G128- is renewed, the front seat cushion padding must also always be renewed!***

Copyright by Volkswagen AG. Volkswagen AG does not guarantee or accept any liability with respect to the correctness of information in this document. Copyright by Volkswagen AG. Printed copies, in part or in whole, is not permitted unless authorised by Volkswagen AG.

Downloaded from www.Manualslib.com manuals search engine

4.22.1 Removing

– Attach seat repair stand -VAS 6136- to engine and gearbox support -VAS 6095- .

– Remove front seat ⇒ page 251 .

– Secure seat to seat repair stand -VAS 6136- .

– Remove right front seat trim ⇒ page 257 .

Vehicles with manually adjustable seat

– Remove left side trim on seat ⇒ page 255 .

– Remove bar and operating lever for front seat ⇒ page 265 .

Vehicles with electrically adjustable seat

– Remove left side trim on electrically adjustable seat ⇒ page 261 .

– Remove bar and operating lever for front seat ⇒ page 267 .

All vehicles

– Remove front seat drawer mounting ⇒ page 263 .

Note

In vehicles fitted with a through-loading function, it is sufficient to fold the backrest forwards. It is not necessary to remove the backrest.

– Remove front seat backrest ⇒ page 268 .

– Remove cover and padding, front seat cushion ⇒ page 291 .

WARNING

Seat occupied sensor, front passenger side -G128- -1- is bonded firmly to the padding of the seat cushion. Isolated removal and installation is not permissible; the sensor must always be renewed with the padding.

Protected by copyright. Copyright by Volkswagen AG.

Downloaded from www.Manualslib.com manuals search engine

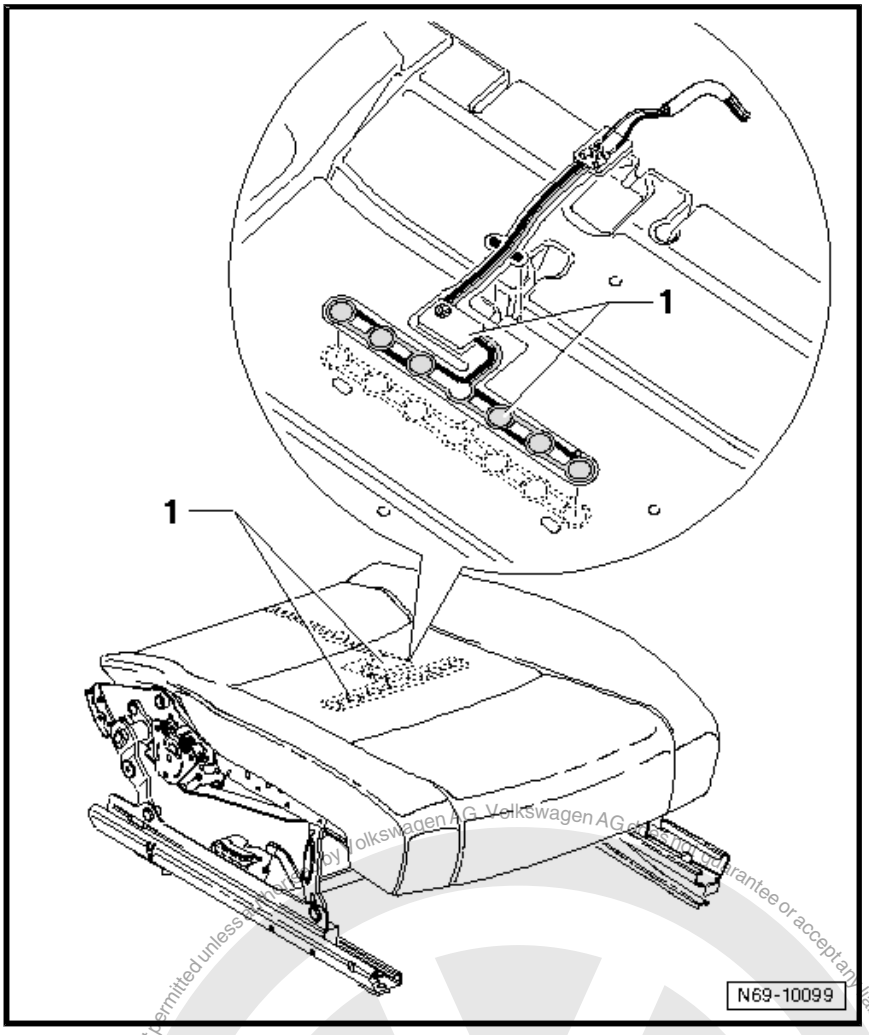

4.22.2 Installing

- In the area of the positioning aids -1-, push the wiring harness in the rear channel of the cushion.
- Push the wiring harness in the area of -the arrows A and B- into the cushion recess.
- Set the sensor -3- positioning aid to the positioning aid of the cushion -2-.

Protected by copyright. Copying for private or commercial purposes, in part or in whole, is not permitted unless authorised by Volkswagen AG. Volkswagen AG does not guarantee or accept any liability with respect to the correctness of information in this document. Copyright by Volkswagen AG.

Downloaded from www.Manualslib.com manuals search engine

Caution

You must ensure that the distance of the sensor to the positioning aids -2- remains constant -arrows-.

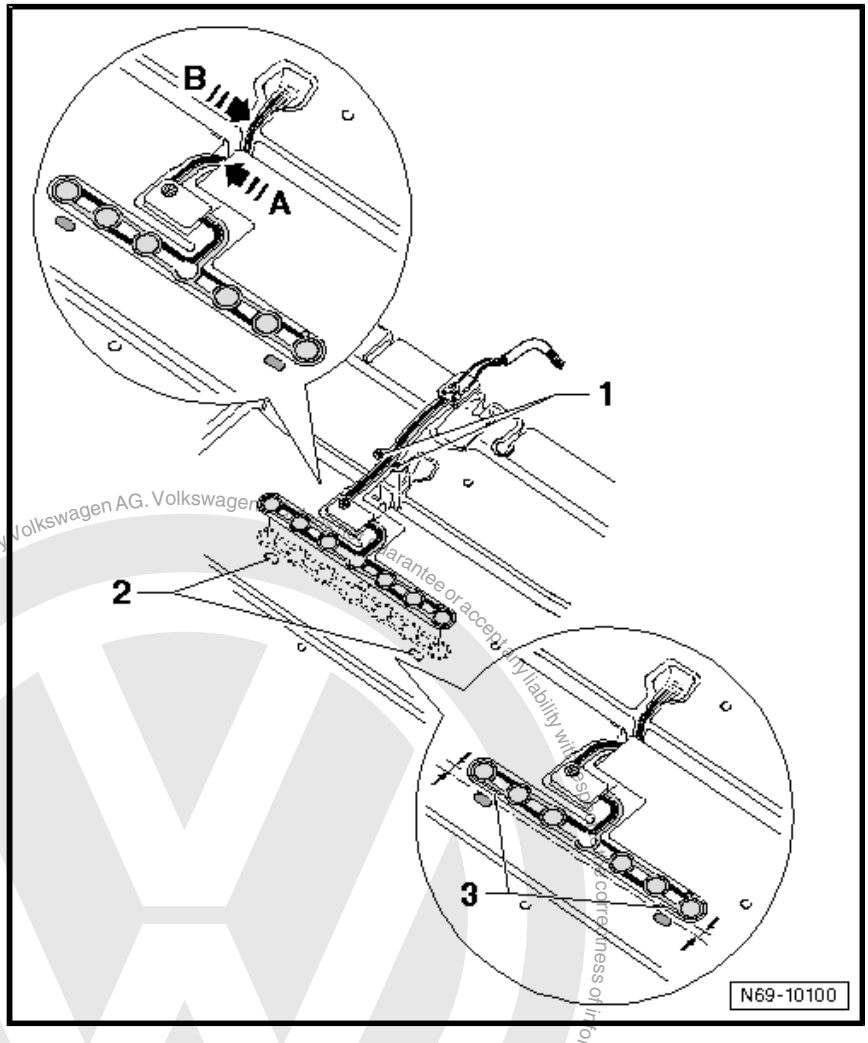

- Fix the set sensor -1- with the right hand, pull the adhesive strip -2- off and attach the sensor to the cushion.
- Push the wiring harness, at the rear, into the cushion recess -arrow-.
- Connect the wiring harness to the vehicle electrics.

Protected by copyright. Copying for private or commercial purposes, in part or in whole, is not permitted unless authorised by Volkswagen AG. Volkswagen AG does not guarantee or accept any liability with respect to the correctness of information in this document. Copyright by Volkswagen AG.

Downloaded from www.Manualslib.com manuals search engine

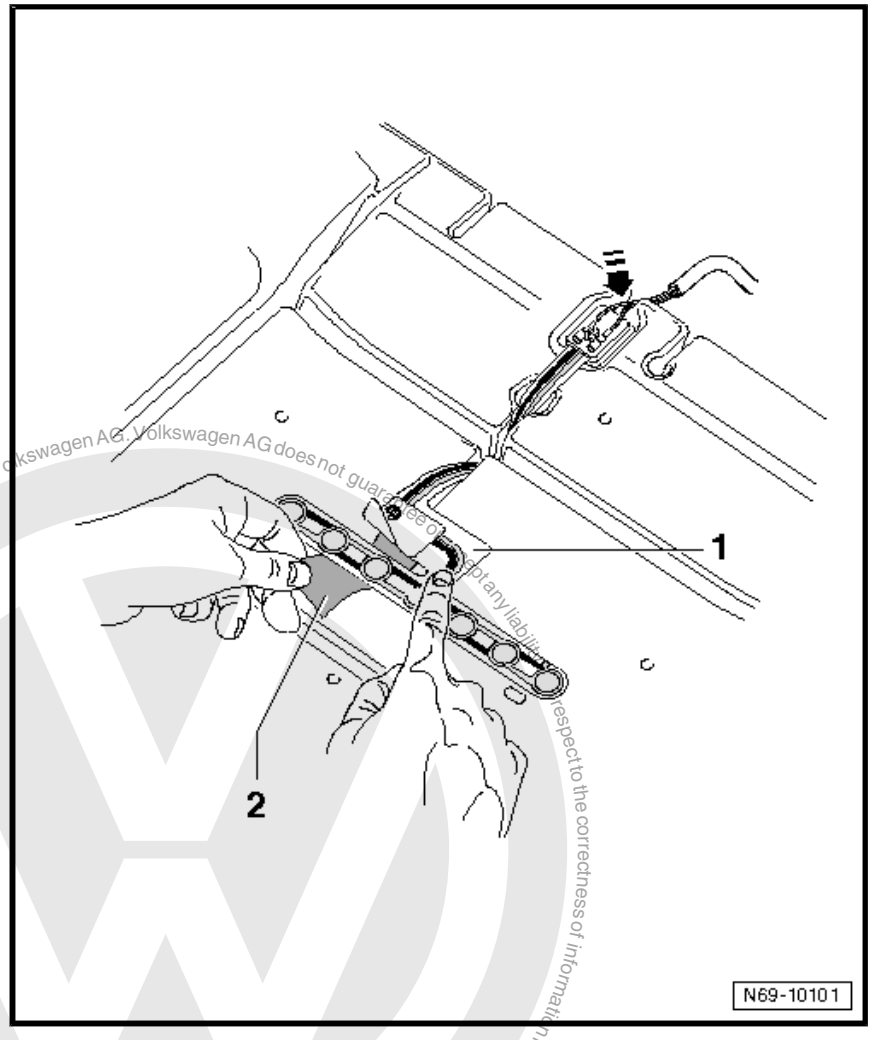

Installation of the other components is carried out in reverse order of removal.

– After installation, carry out a function check with ignition switched on.

Protected by copyright. Copying for private or commercial purposes, in part or in whole, is not permitted unless authorised by Volkswagen AG. Volkswagen AG does not guarantee or accept any liability with respect to the correctness of information in this document. Copyright by Volkswagen AG.

Downloaded from www.Manualslib.com manuals search engine

4.23 Adapting components

- Vehicle diagnostic, testing and information system -VAS 5051-
- Diagnosis cable -VAS 5051/1- or -VAS 5051/3-

Select “guided fault finding” in vehicle diagnostic, testing and information system -VAS 5051- .

Once all control units have been read:

– Press “GoTo” button.
– Select “Function/component selection”.
– Select “Body”
– “General body repairs”
– Select “01 Systems capable of self-diagnosis”
– Select “Airbag”.
– Select “Functions”.
– Select “Action”.

Protected by copyright. Copying for private or commercial purposes, in part or in whole is not permitted unless authorised by Volkswagen AG. Volkswagen AG does not guarantee or accept any liability with respect to the correctness of information in this document. Copyright by Volkswagen AG.

Downloaded from www.Manualslib.com manuals search engine

5 Seat occupied recognition (USA)

The seat occupied recognition controls the automatic deactivation of the front passenger airbag.

This feature is only installed in models which are initially registered in the USA.

5.1 Safety precautions for when working on seat occupied recognition

- Basic settings of seat occupied recognition control unit -J706- must be performed after each repair to front passenger seat in which the seat and/or the backrest was “detached”. Carry out the basic settings using a diagnostic tester using “Guided functions”.
- The mat of the seat recognition sensor must not be kinked.
- A leaky mat must be renewed (repair kit).
- The pressure hose of the mat must not be kinked.
- The components of the seat recognition (repair kit) must not fall on hard surfaces.
- The components of the seat recognition must not come into contact with grease.
- There is always a danger that the components of the seat recognition may be damaged by pointed/sharp objects when working on the seat. This danger must be prevented.
- The mat, the felt and all other covers must have no folds/creases.
- Ensure when installing that the seat padding and cover are correctly installed.
- Renew all padding clips and clip connections on cover, ensure they are positioned correctly on the seat.
- The basic setting of the system is only possible between temperatures of 0° Celsius and +40° Celsius.
- Ensure that no object is on the seat before and/or during the basic settings.
- The use of additional seat covers, such as cushions or similar, effects the function of the seat recognition and therefore the function of the airbag.

5.2 Procedure for seat belt tensioner after an accident and /or triggering of airbag

- Basic settings of seat occupied recognition control unit -J706- must be performed after each triggering of front passenger airbag and/or seat belt tensioner on front passenger side. Carry out the basic settings using a diagnostic tester using “Guided functions”.
- When a seat rail and/or seat pan require replacing, due to deformation, after an accident then the seat recognition must also be replaced using a “seat recognition repair kit”. Finally carry out basic settings of seat occupied recognition control unit -J706- . Carry out the basic settings using a diagnostic tester using “Guided functions”.

Protected by copyright. Copyright by Volkswagen AG. Volkswagen AG does not guarantee or accept any liability with respect to the correctness of information in this document. Copyright by Volkswagen AG. Copying for private or commercial purposes, in part or in whole, is not permitted unless authorised by Volkswagen AG.

Downloaded from www.Manualslib.com manuals search engine

5.3 Assembly overview - seat occupied recognition (USA)

1 - Wiring harness for front seat

2 - Seat frame

3 - Seat occupied recognition control unit -J706-

4 - Front seat cushion padding

- ❑ Must not be separated from mat for seat occupied recognition

5 - Mat for seat occupied recognition

- ❑ Must not be separated from pressure hose and padding for front seat cushion

6 - Insert profile

- ❑ Observe installation position

7 - Bracket

- ❑ White

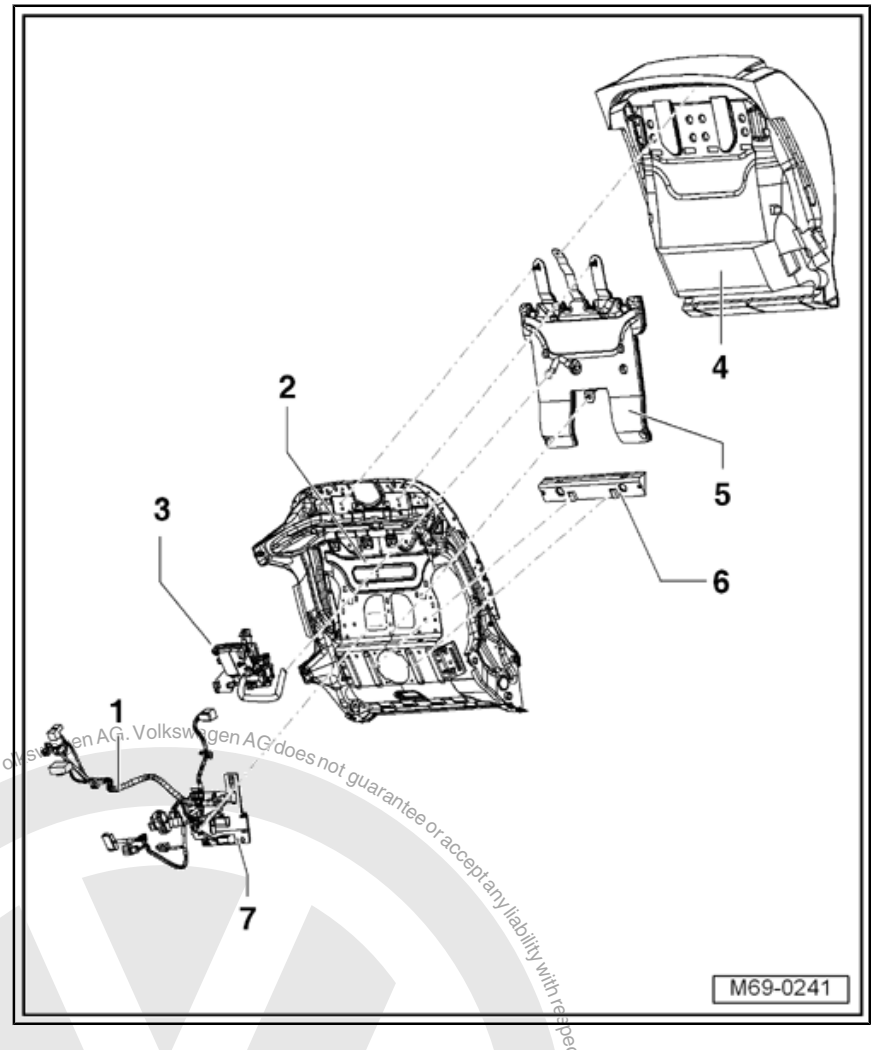

5.4 Parts repair kit for seat occupied recognition

If a system component is malfunctioning it must be replace with a repair kit that is already pre-set according to the data of the respective vehicle. This includes:

Protected by copyright. Copying for private or commercial purposes, part or in whole, is not permitted unless authorised by Volkswagen AG. Volkswagen AG does not guarantee or accept any liability with respect to the correctness of information in this document. Copyright by Volkswagen AG.

Downloaded from www.Manualslib.com manuals search engine

> **Caution**
>
> *Do not separate the individual parts of the repair kit for seat occupied recognition.*

1 - Front seat cushion padding

2 - Pressure hose

3 - Mat for seat occupied recognition

4 - Pressure sensor for seat occupied recognition -G452-

5 - Seat occupied recognition control unit -J706-

6 - Wiring harness for front seat

7 - Bracket

- ❑ White

> **Caution**
>
> *Read the instruction on the packaging of the repair kit to ensure it is installed correctly. An incorrect handling/installation may cause the system to malfunction.*

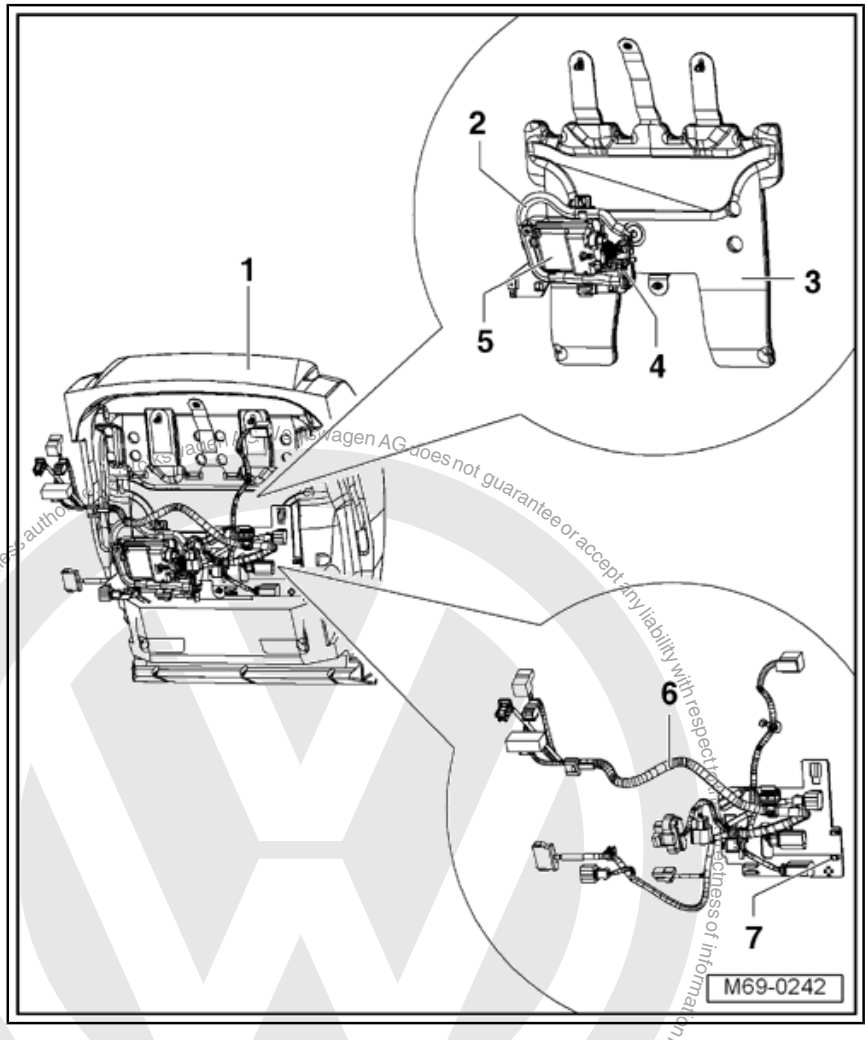

5.5 Removing and installing repair kit for seat occupied recognition on vehicles with manually adjusted seats

> **WARNING**
>
> *Observe safety precautions when working on seat occupied recognition* *⇒ page 148* *.*

Protected by copyright. Copying for private or commercial purposes, in part or in whole, is not permitted unless authorised by Volkswagen AG. Volkswagen AG does not guarantee or accept any liability with respect to the correctness of information in this document. Copyright by Volkswagen AG.

Downloaded from www.Manualslib.com manuals search engine

Note

- *Seat padding, mat for seat occupied recognition, control unit and pressure sensor should only be renewed as one unit. The components are adapted to each other and should not be separated!*
- *Only the wiring harnesses described as follows should be separated!*

5.5.1 Removing

– Attach seat repair stand -VAS 6136- to engine and gearbox support -VAS 6095- .

– Remove front seat ⇒ page 251 .

– Secure seat to seat repair stand -VAS 6136- .

– Remove right trim on seat:

- Seat with no folding backrest ⇒ page 257 .
- Seat with folding backrest ⇒ page 259 .

– Remove left trim on seat:

- Seat with no folding backrest ⇒ page 255 .
- Seat with folding backrest ⇒ page 258 .

– Remove bar and operating lever for front seat ⇒ page 265 .

– Remove seat drawer mounting, if part of original equipment ⇒ page 263 .

– Disconnect connector -1- of heated front passenger seat control unit -J132- , if part of original equipment.

– Remove retaining clip -2-, if fitted.

– Remove retaining clip -3-.

– Disconnect connector -4- and remove connector from seat frame, if fitted.

– Disconnect connector -5- for side airbag and remove connector from seat frame.

– Remove wiring harness clips -6- and disconnect backrest wiring harness from seat frame.

Protected by copyright. Copying for private or commercial purposes, in part or in whole, is not permitted unless authorised by Volkswagen AG. Volkswagen AG does not guarantee or accept any liability with respect to the correctness of information in this document. Copyright by Volkswagen AG.

Downloaded from www.Manualslib.com manuals search engine

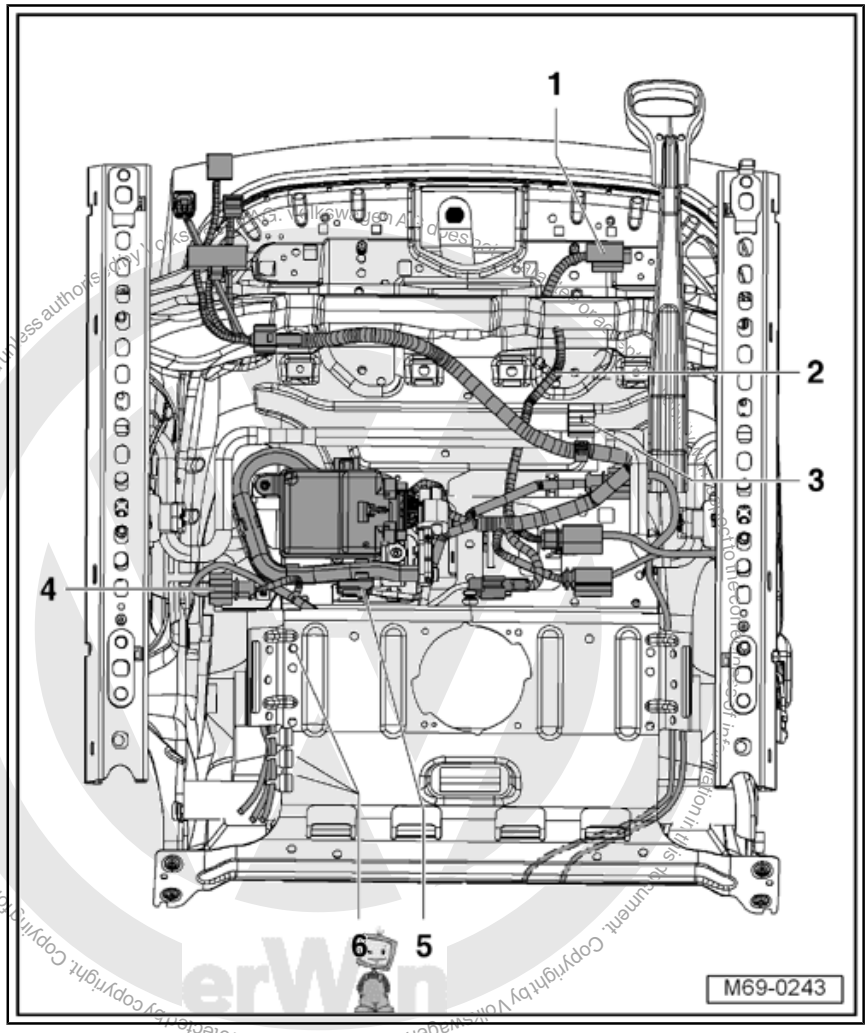

- Remove front seat backrest ⇒ page 268 .
- Remove cover from front seat cushion (front seat padding is not removed) ⇒ page 291 .
- Unclip pressure hose -6- from retainers.
- Unclip pressure sensor for seat occupied recognition -G452- -5- from retainer, when doing this do not disconnect connectors -3- or -4- on pressure sensor for seat occupied recognition -G452- or on seat occupied recognition control unit -J706- -2-.
- Remove bolts -1- (1.5 Nm).

Downloaded from www.Manualslib.com manuals search engine

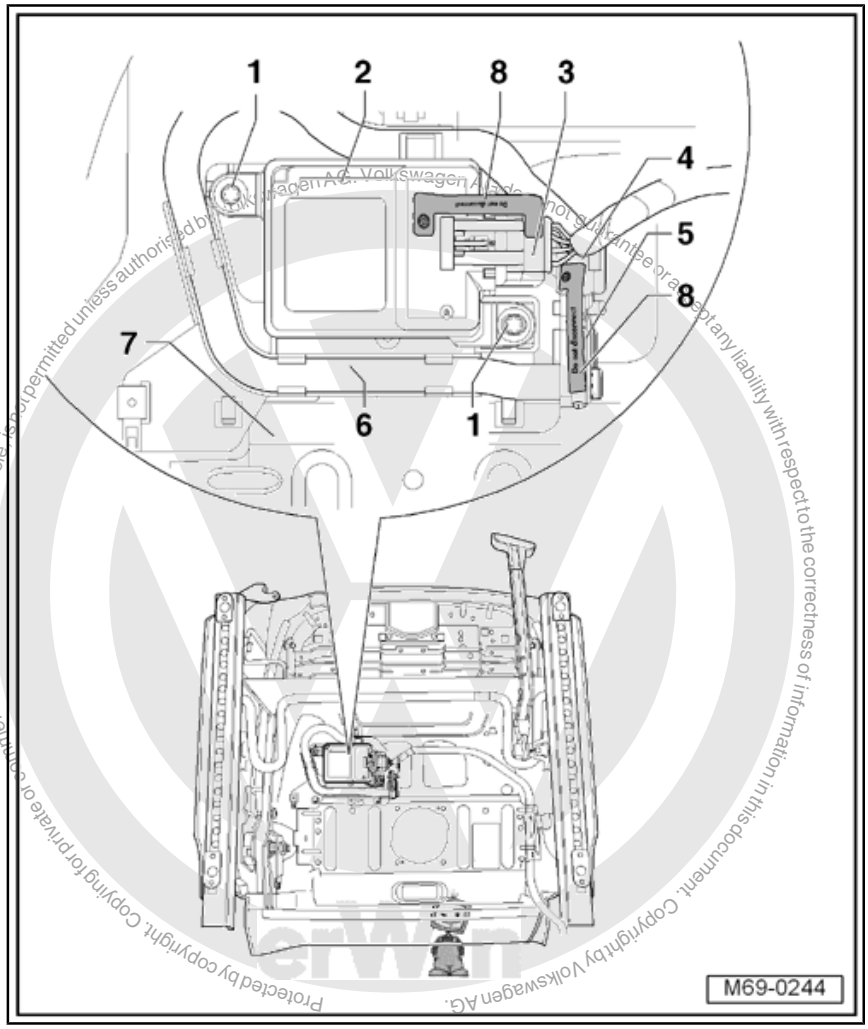

Protected by copyright. Copying for private or commercial purposes, in part or in whole, is not permitted unless authorised by Volkswagen AG. Volkswagen AG does not guarantee or accept any liability with respect to the correctness of information in this document. Copyright by Volkswagen AG.

- Disconnect connector -3- for front seat heating, if fitted.
- Disconnect black connector -5- for seat belt force sensor for seat occupied recognition -G453- .
- Disconnect yellow connector -4- for front passenger side belt switch -E25- .
- Disconnect connector -6- for front seat backrest heating, if fitted.
- Cut open cable ties for wiring harness -2-.
- Slide white retainer -1- to left and remove retainer from seat frame.
- Remove all connectors from retainer.

> ⚠ **Caution**
>
> *Do not disconnect connector on seat occupied recognition control unit -J706- .*

Downloaded from www.Manualslib.com manuals search engine

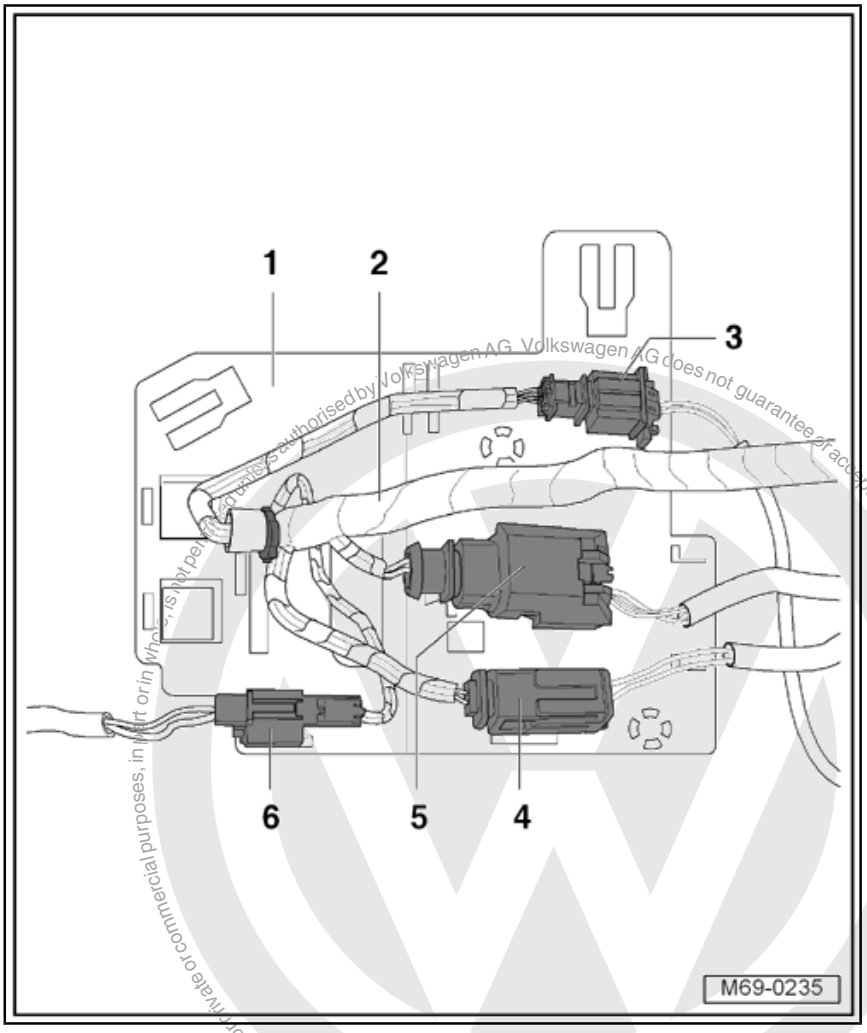

– Lift front seat cushion padding -1- slightly; front seat cushion padding may not be disconnected from seat occupied recognition mat -4- when doing this.

– Remove clips -2- from seat frame -5-, do not remove clip -3-.

Caution

- *Do not damage sticker -8- (fig. M69- 0244 ⇒ page 152) when removing and installing.*
- *The front seat cushion padding, the mat for the seat occupied recognition, the pressure hose, the pressure sensor for seat occupied recognition -G452- and the seat occupied recognition control unit -J706- may not be disconnected.*

Protected by copyright. Copying for private or commercial purposes, in part or in whole, is not permitted unless authorised by Volkswagen AG. Volkswagen AG does not guarantee or accept any liability with respect to the correctness of information in this document. Copyright by Volkswagen AG.

Downloaded from www.Manualslib.com manuals search engine

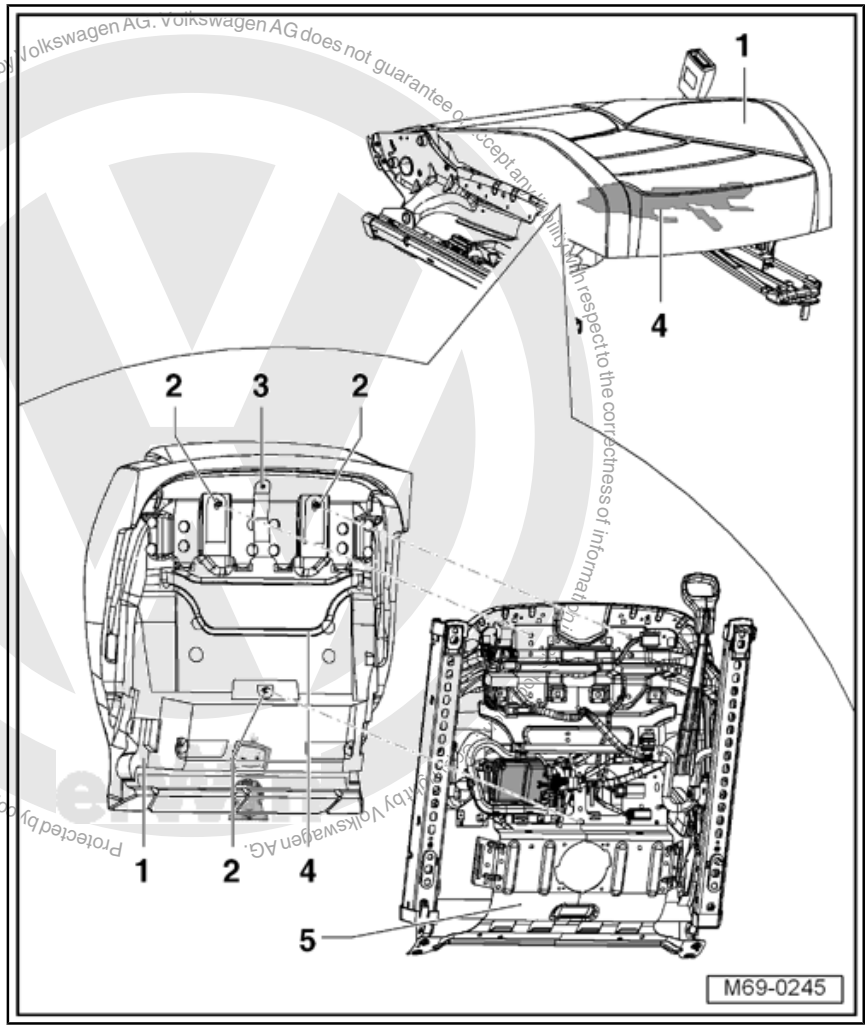

Remove bolts -1- (2.5 Nm) and remove seat occupied recognition control unit -J706- retainer.

Downloaded from www.Manualslib.com manuals search engine

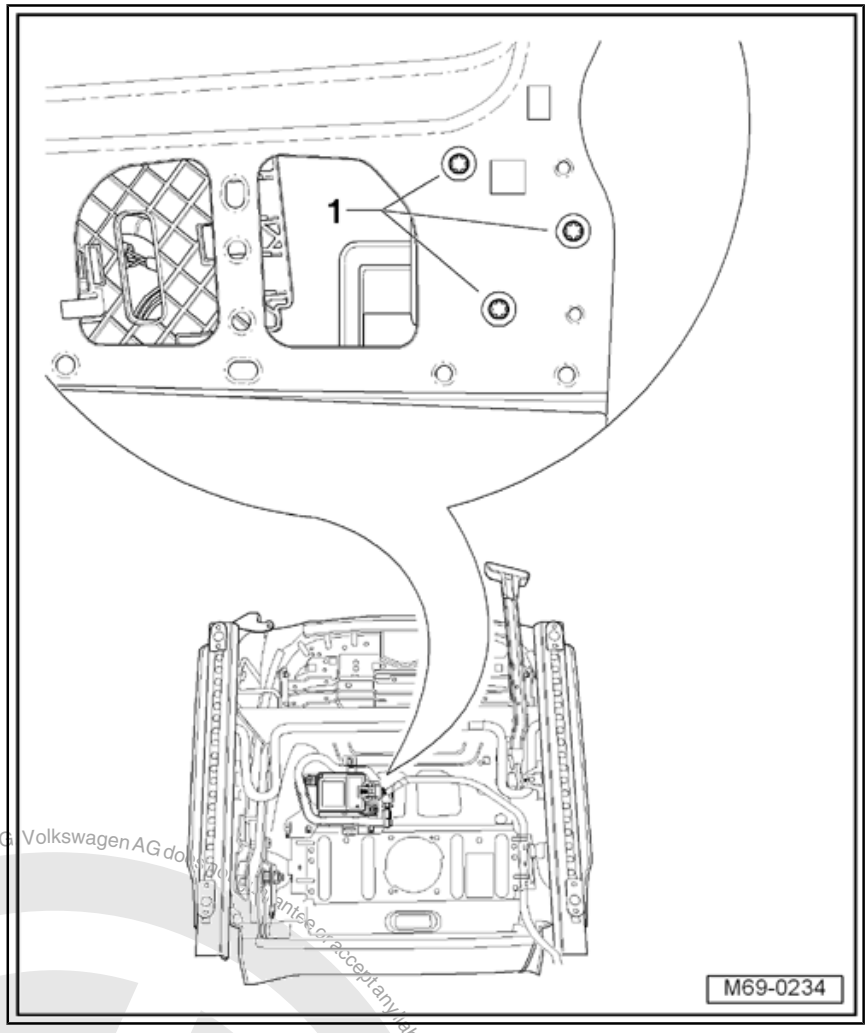

– Remove front seat cushion padding -1- together with mat for seat occupied recognition -4-.

– Guide pressure hose -6-, the pressure sensor for seat occupied recognition -G452- -7-, the seat occupied recognition control unit -J706- -9- and seat wiring harness -8- through opening -arrow- in seat frame -5-.

Protected by copyright. Copying for private or commercial purposes, in part or in whole, is not permitted unless authorised by Volkswagen AG. Volkswagen AG does not guarantee or accept any liability with respect to the correctness of information in this document. Copyright by Volkswagen AG.

Downloaded from www.Manualslib.com manuals search engine

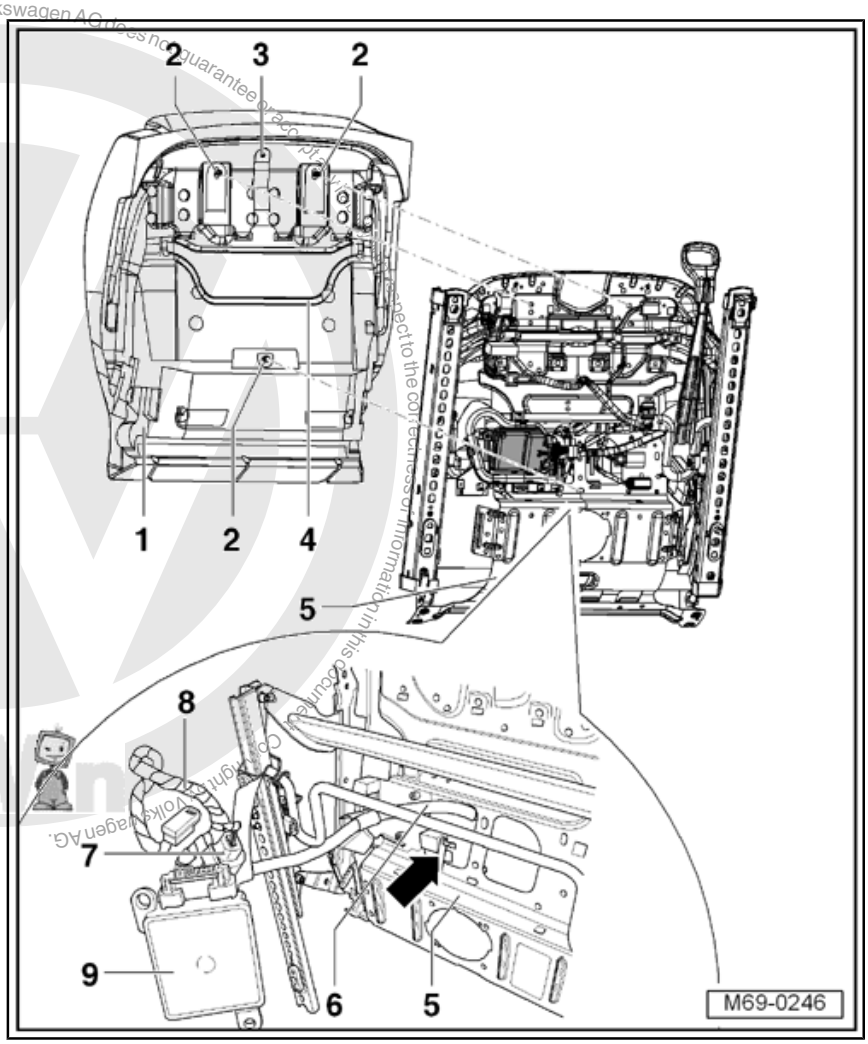

5.5.2 Installing

Note

- *When installing, ensure that no wiring harness of the seat heating system is located between the padding and the mat for seat occupied recognition.*
- *The pressure hose should be routed without kinks.*
- *Adhesive labels on connectors should not be damaged.*
- *Once vehicle has been reconnected to vehicle battery, check for clearance of components that have been renewed by moving seat position.*
- *After seat occupied recognition has been renewed, vehicle diagnosis, testing and information system -VAS 5051- must be used in "Guided fault finding" mode to initiate basic setting of occupant classification system* ⇒ page 147 .

Downloaded from www.Manualslib.com manuals search engine

WARNING

Basic setting must be carried out with seat unoccupied.

Installation is basically carried out in the reverse sequence; note the following when doing this:

– Secure insert profile -2- using double-sided adhesive tape -3- to seat frame -1- as shown.

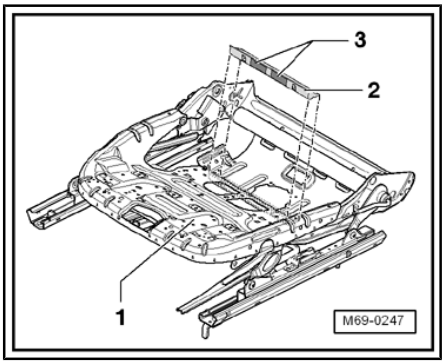

– Clip pressure hose -6- into retainer. Start by clipping into retainer nearest to pressure sensor for seat occupied recognition -G452- -5- and end by clipping into retainer nearest to connector -3-.

Protected by copyright. Copying for private or commercial purposes, in part or in whole, is not permitted unless authorised by Volkswagen AG. Volkswagen AG does not guarantee or accept any liability with respect to the correctness of information in this document. Copyright by Volkswagen AG.

Downloaded from www.Manualslib.com manuals search engine

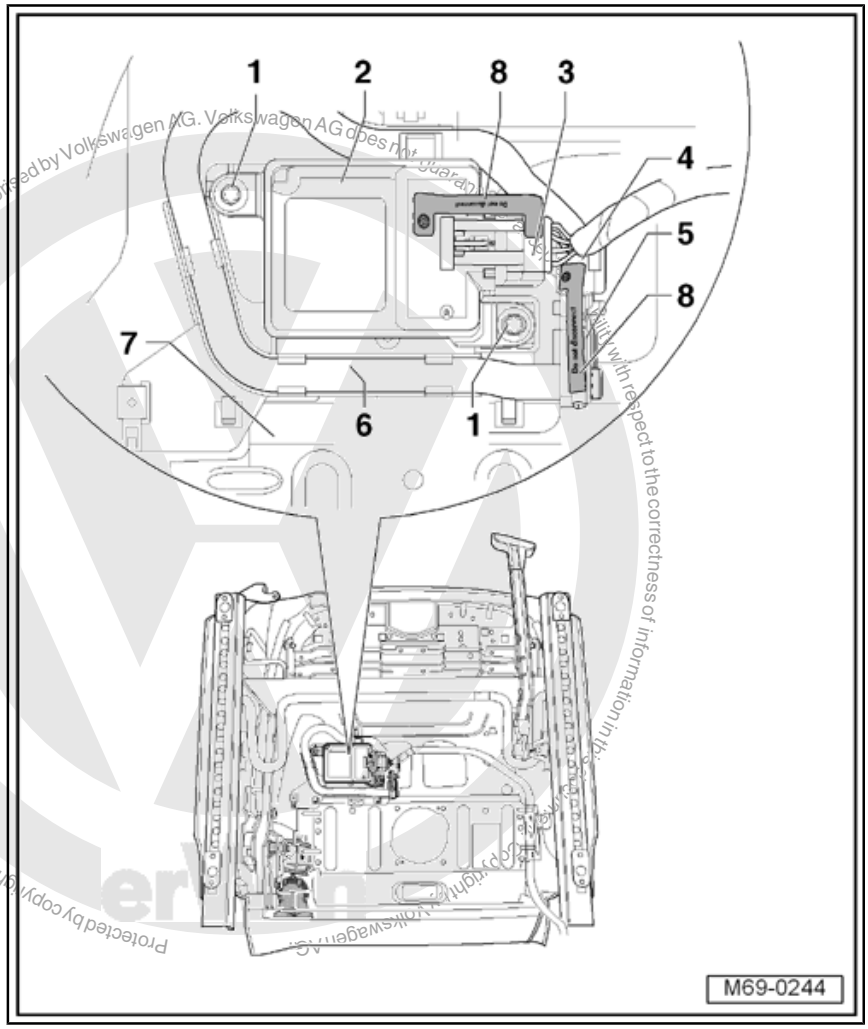

Protected by copyright. Copying for private or commercial purposes, in part or in whole, is not permitted unless authorised by Volkswagen AG. Volkswagen AG does not guarantee or accept any liability with respect to the correctness of information in this document. Copyright by Volkswagen AG.

WARNING

Do not damage sticker -8- when removing and installing.

Ensure that nobody is in vehicle when vehicle battery is reconnected.

– Reconnect vehicle battery ⇒ Rep. Gr. 27 .

5.6 Removing and installing repair kit for seat occupied recognition on vehicles with electrically adjusted seats

WARNING

Observe safety precautions when working on seat occupied recognition *⇒ page 148* *.*

Downloaded from www.Manualslib.com manuals search engine

Note

- *Seat padding, mat for seat occupied recognition, control unit and pressure sensor should only be renewed as one unit. The components are adapted to each other and should not be separated!*
- *Only the wiring harnesses described as follows should be separated!*

5.6.1 Removing

– Attach seat repair stand -VAS 6136- to engine and gearbox support -VAS 6095- .

– Remove front seat ⇒ page 251 .

– Secure seat to seat repair stand -VAS 6136- .

– Remove right trim on seat ⇒ page 257 .

– Remove left trim on electrically adjustable seat ⇒ page 261 .

– Remove seat drawer mounting, if part of original equipment ⇒ page 263 .

– Remove bar and operating lever on electrically adjustable seat ⇒ page 267 .

– Disconnect connector -1- for backrest adjustment motor.

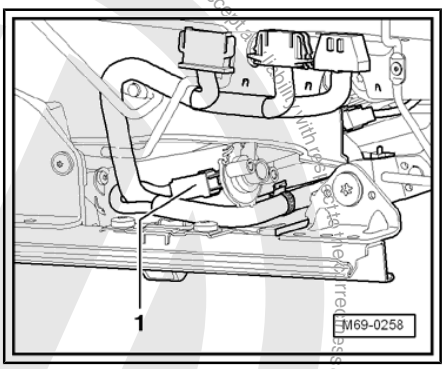

– Disconnect connector -1- for seat adjustment motors.

– Remove cable retainers -2- and -3-.

– Disconnect connector -4- for backrest adjustment and remove connector from seat frame.

– Remove cable retainer -5-.

– Disconnect connector -6- of heated front passenger seat control unit -J132- , if part of original equipment.

– Remove retaining clip -7-, if fitted.

– Disconnect connector -8- for side airbag.

– Remove cable retainer -9-.

– Disconnect connector -10- for front seat backrest heating and remove yellow connector, if fitted.

Note

Do not remove white fixture.

– Remove cable retainer -11-.

Downloaded from www.Manualslib.com manuals search engine

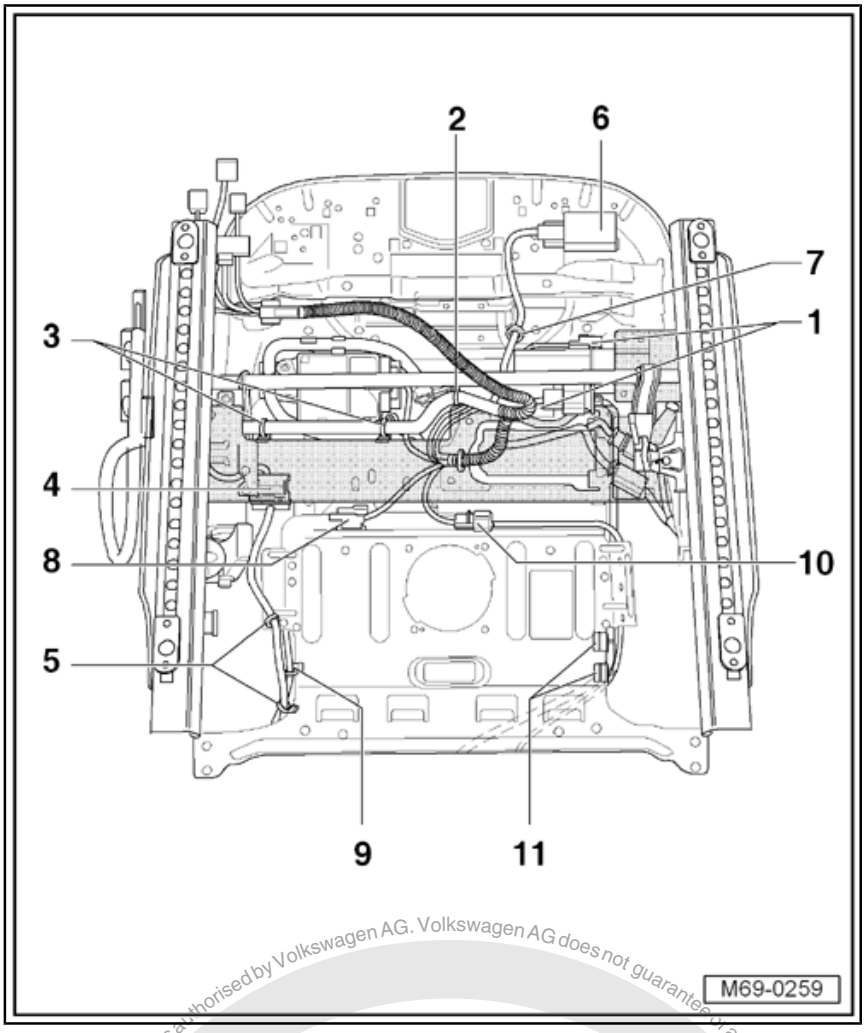

– Remove front seat backrest ⇒ page 268 .

– Remove cover from front seat cushion (front seat padding is not removed) ⇒ page 291 .

Caution

Do not disconnect connector on seat occupied recognition control unit -J706- .

– Unclip pressure hose -6- from retainers.

– Unclip pressure sensor for seat occupied recognition -G452- -5- from retainer, when doing this do not disconnect connectors -3- or -4- on pressure sensor for seat occupied recognition -G452- or on seat occupied recognition control unit -J706- -2-.

– Remove bolts -1- (1.5 Nm).

Protected by copyright. Copying for private or commercial purposes, in part or in whole, is not permitted unless authorised by Volkswagen AG. Volkswagen AG does not guarantee or accept any liability with respect to the correctness of information in this document. Copyright by Volkswagen AG.

Downloaded from www.Manualslib.com manuals search engine

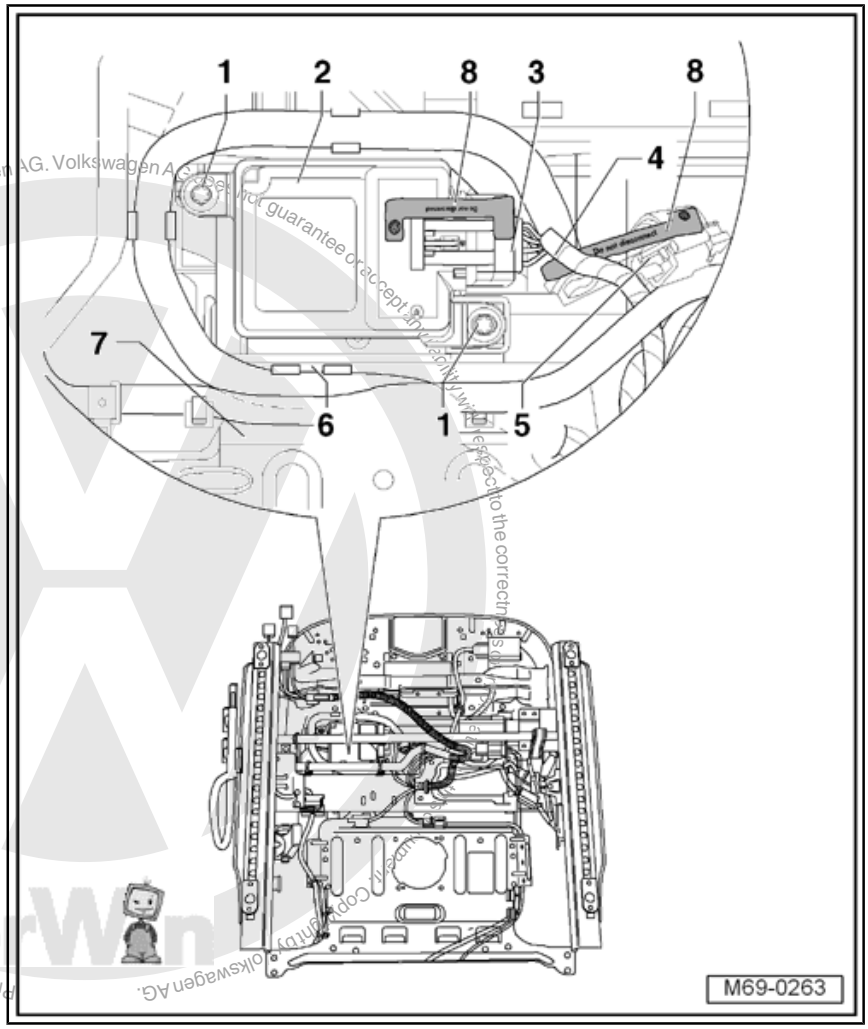

Protected by copyright. Copying for private or commercial purposes, in part or in whole, is not permitted unless authorised by Volkswagen AG. Volkswagen AG does not guarantee or accept any liability with respect to the correctness of information in this copy.

– Disconnect black connector -1- for seat belt force sensor for seat occupied recognition -G453- .
– Disconnect yellow connector -2- for front passenger side belt switch -E25- .
– Remove white retainer -3- from seat frame.

Downloaded from www.Manualslib.com manuals search engine

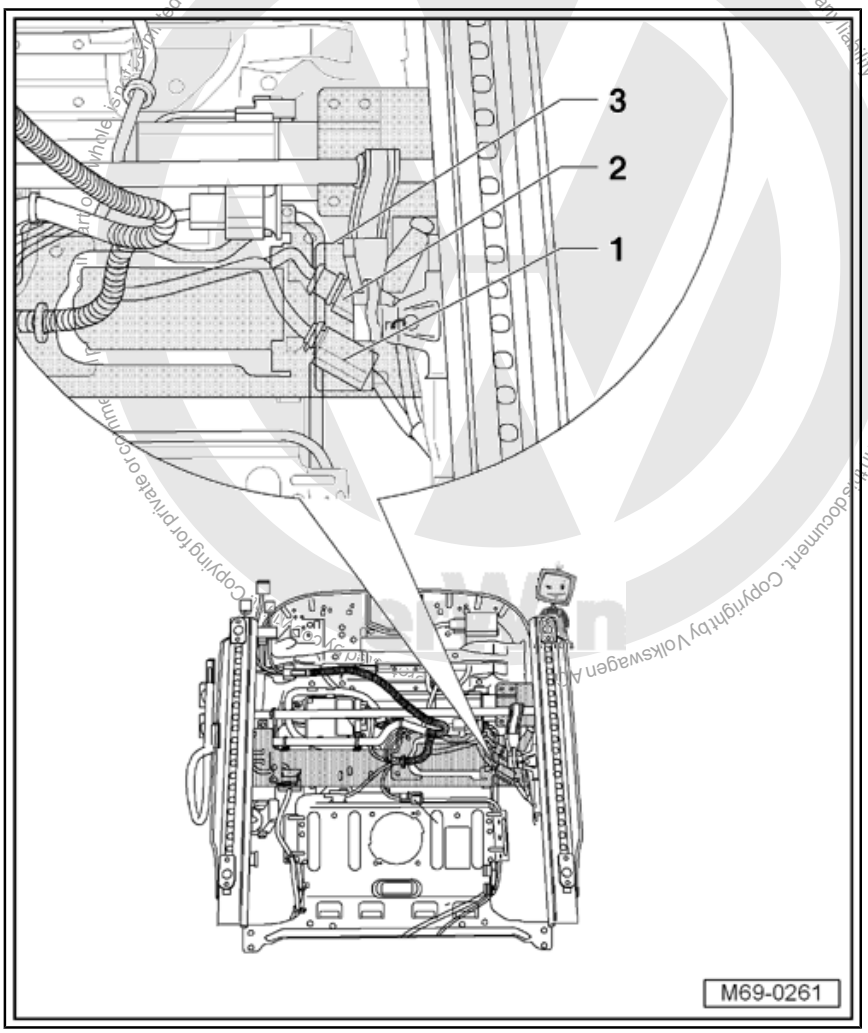

- Disconnect connector -3- for front seat heating, if fitted.
- Disconnect connector -4- for front seat backrest heating, if fitted.
- Cut open cable ties for wiring harness -2-.
- Slide white retainer -1- to left and remove retainer from seat frame.
- Remove all connectors from retainer.

Downloaded from www.Manualslib.com manuals search engine

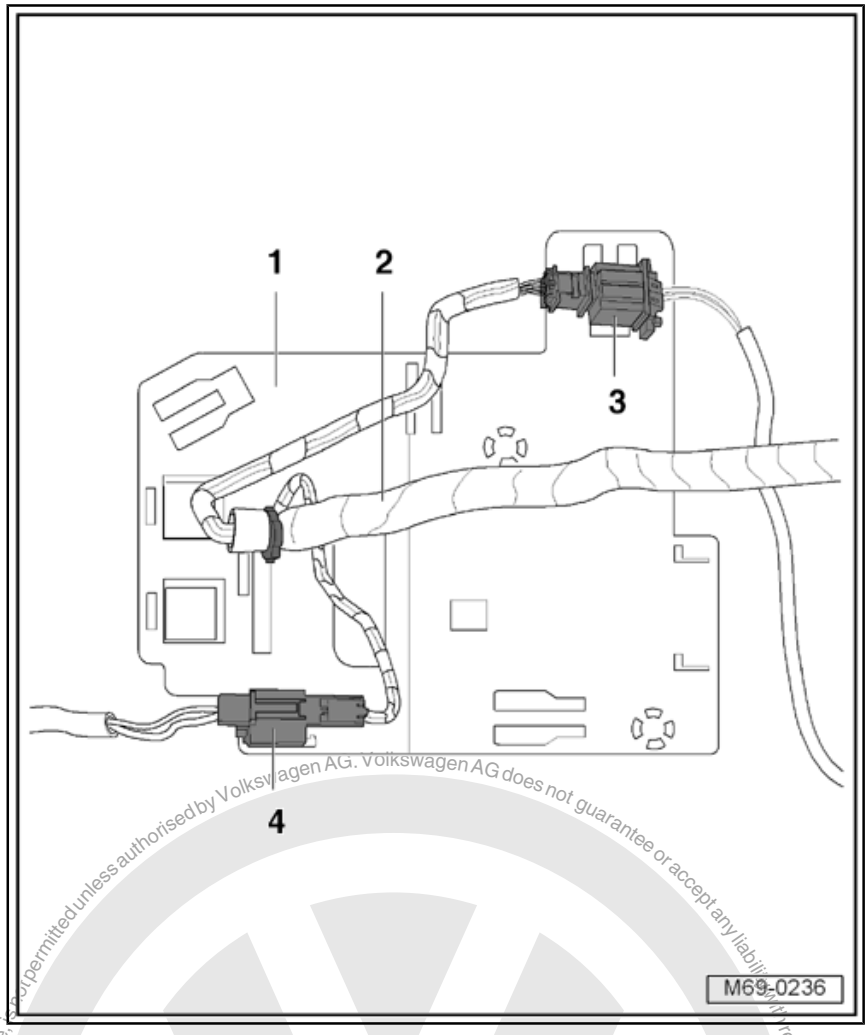

– Lift front seat cushion padding -1- slightly; front seat cushion padding may not be disconnected from seat occupied recognition mat -4- when doing this.
– Remove clips -2- from seat frame -5-, do not remove clip -3-.

Caution

- *The front seat cushion padding, the mat for the seat occupied recognition, the pressure hose, the pressure sensor for seat occupied recognition -G452- and the seat occupied recognition control unit -J706- may not be disconnected.*

Protected by copyright. Copying for private or commercial purposes, in part or in whole, is not permitted unless authorised by Volkswagen AG. Volkswagen AG does not guarantee or accept any liability with respect to the correctness of information in this document. Copyright by Volkswagen AG.

Downloaded from www.Manualslib.com manuals search engine

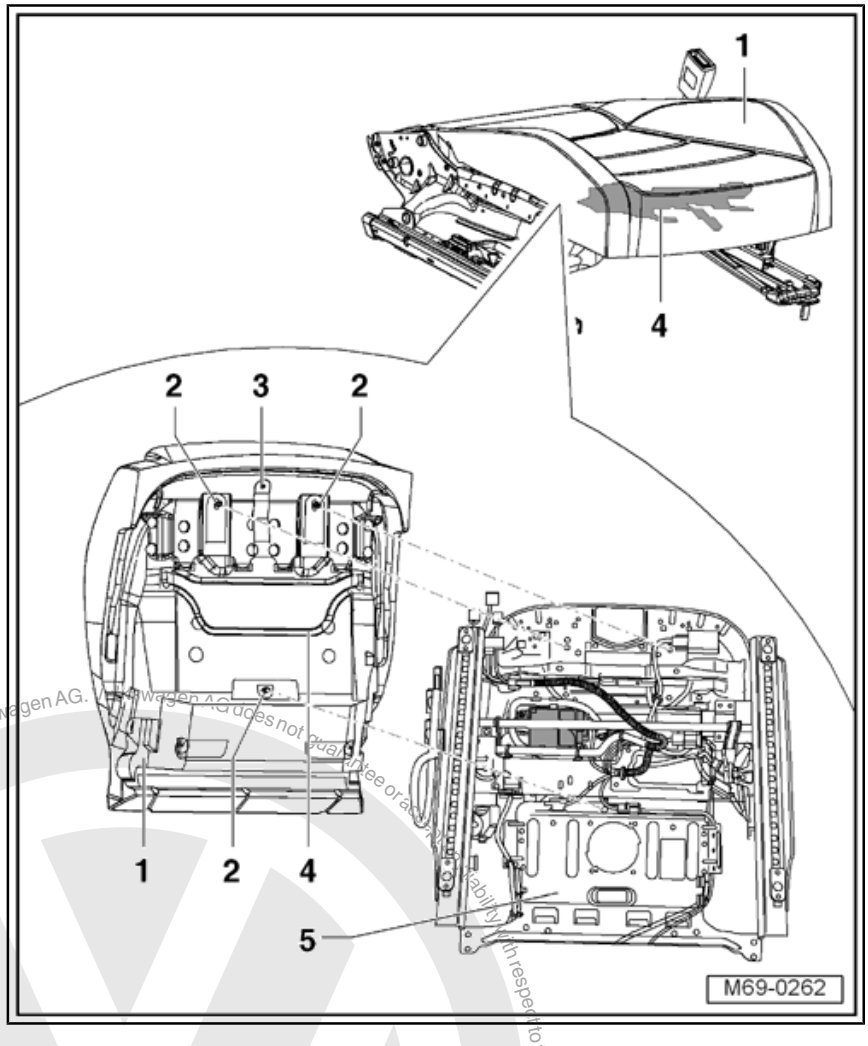

– Remove front seat cushion padding -1- together with mat for seat occupied recognition -4-.
– Guide pressure hose -6-, the pressure sensor for seat occupied recognition -G452- -7-, the seat occupied recognition control unit -J706- -9- and seat wiring harness -8- through opening -arrow- in seat frame -5-.

Protected by copyright. Copying for private or commercial purposes, in part or in whole, is not permitted unless authorised by Volkswagen AG. Volkswagen AG does not guarantee or accept any liability with respect to the correctness of information in this document. Copyright by Volkswagen AG.

Downloaded from www.Manualslib.com manuals search engine

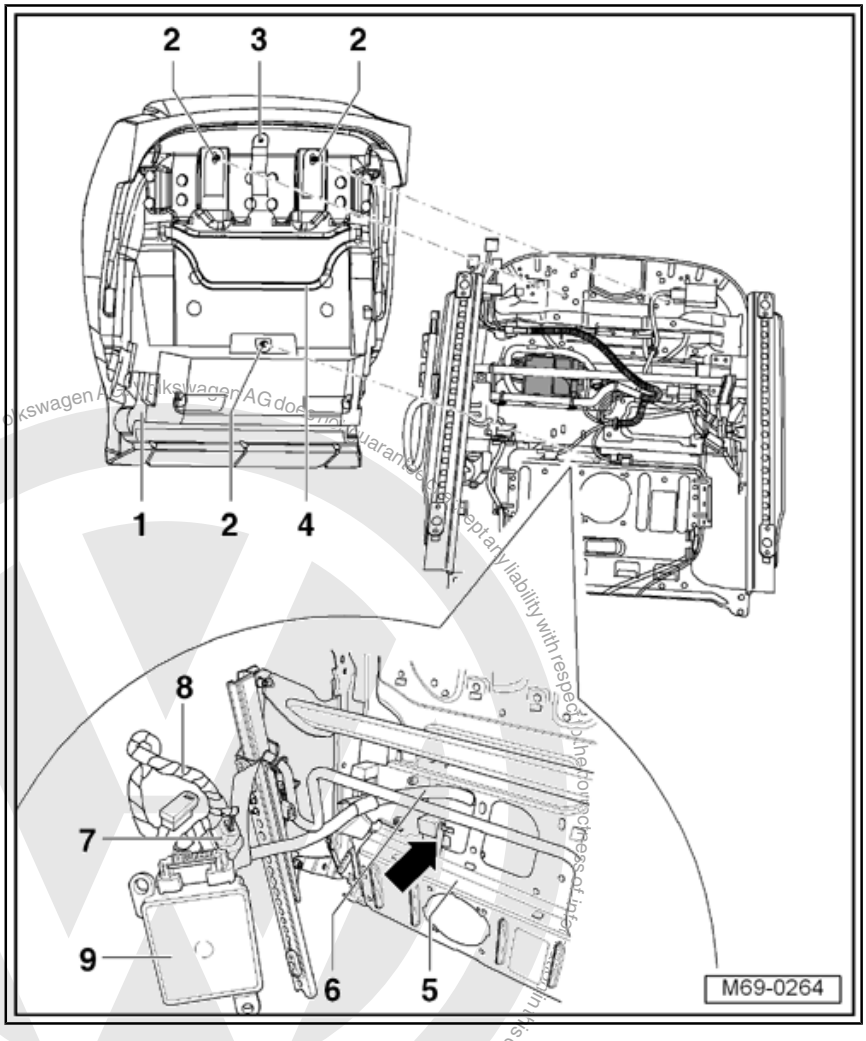

5.6.2 Installing

Note

- *When installing, ensure that no wiring harness of the seat heating system is located between the padding and the mat for seat occupied recognition.*
- *The pressure hose should be routed without kinks.*
- *Adhesive labels on connectors should not be damaged.*
- *Once vehicle has been reconnected to vehicle battery, check for clearance of components that have been renewed by moving seat position.*
- *After seat occupied recognition has been renewed, vehicle diagnosis, testing and information system -VAS 5051- must be used in "Guided fault finding" mode to initiate basic setting of occupant classification system* ⇒ page 147 *.*

Protected by copyright. Copyright by Volkswagen AG. Copying for private or commercial purposes, in part or in whole, is not permitted unless authorised by Volkswagen AG. Volkswagen AG does not guarantee or accept any liability with respect to the correctness of information in this document.

Downloaded from www.Manualslib.com manuals search engine

WARNING

Basic setting must be carried out with seat unoccupied.

Installation is basically carried out in the reverse sequence; note the following when doing this:

– Secure insert profile -2- using double-sided adhesive tape -3- to seat frame -1- as shown.

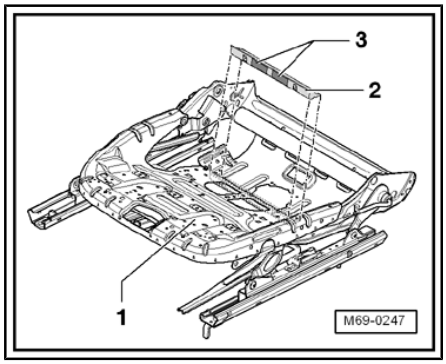

– Clip pressure hose -6- into retainer. Start by clipping into retainer nearest to pressure sensor for seat occupied recognition -G452- -5- and end by clipping into retainer nearest to connector -3-.

Protected by copyright. Copying for private or commercial purposes, in part or in whole, is not permitted unless authorised by Volkswagen AG. Volkswagen AG does not guarantee or accept any liability with respect to the correctness of information in this document. Copyright by Volkswagen AG.

Downloaded from www.Manualslib.com manuals search engine

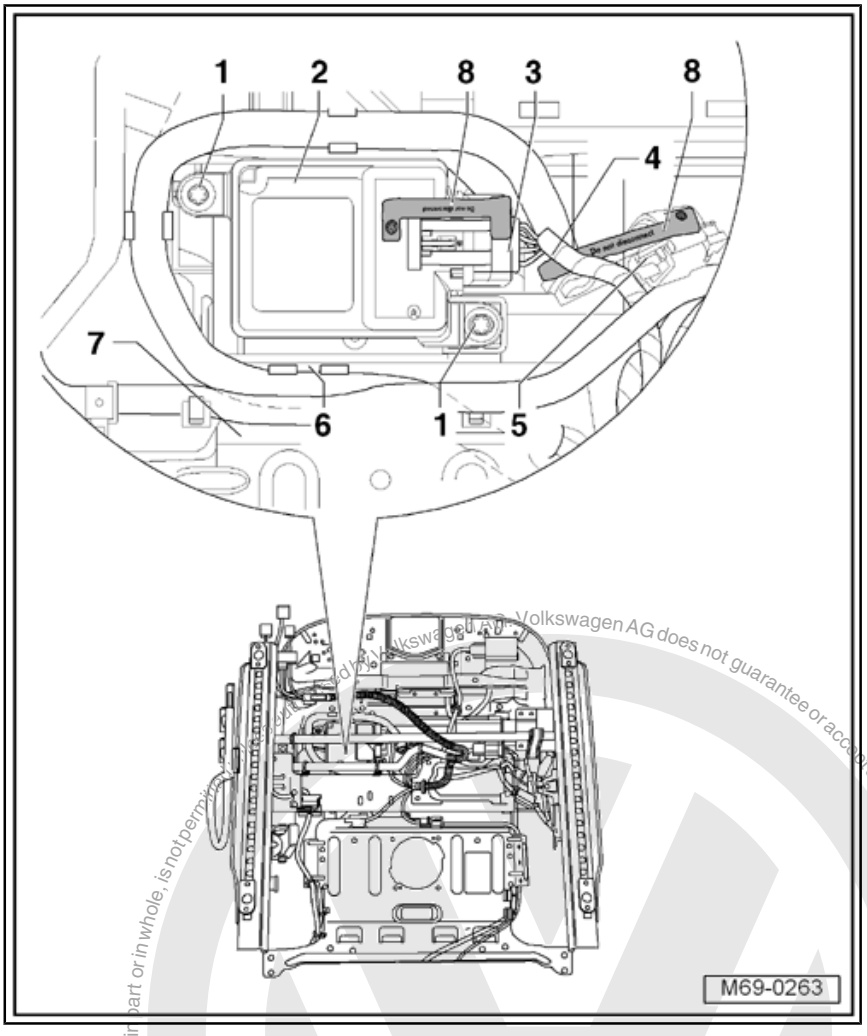

WARNING

Do not damage sticker -8- when removing and installing.

Ensure that nobody is in vehicle when vehicle battery is re-connected.

– Reconnect vehicle battery ⇒ Rep. Gr. 27 .

5.7 Importers reporting obligation

Following the installation of “repair kit for seat occupied recognition” and/or “belt force sensor”, the labels (only tear-off strips) of the new components must be stuck onto the “Registry note 2 for Airbag Systems”. For registration, the “Registry note 2 for Airbag Systems” must be sent on to the importer.

The “Registry note 2 for Airbag Systems” can be printed out of the “Technical Service Handbook”:

ElsaWin

→ Technical Service Handbook

→ Technical solution

Protected by copyright. Copying for private or commercial purposes, in part or in whole, is not permitted unless authorised by Volkswagen AG. Volkswagen AG does not guarantee or accept any liability with respect to the correctness of information in this document. Copyright by Volkswagen AG.

Downloaded from www.Manualslib.com manuals search engine

→ Vehicle electrics

→ Function

→ Passenger protection

→ Deactivation of airbag units

→ Systems

In the “Technical Service Handbook 2”, the “Process ID” or the “technical solution number” for this procedure is “2000987”.

Protected by copyright. Copying for private or commercial purposes, in part or in whole, is not permitted unless authorised by Volkswagen AG. Volkswagen AG does not guarantee or accept any liability with respect to the correctness of information in this document. Copyright by Volkswagen AG.

Downloaded from www.Manualslib.com manuals search engine

Protected by copyright. Copyright by Volkswagen AG. Volkswagen AG does not guarantee or accept any liability with respect to the correctness of information in this document. Copying for private or commercial purposes, in part or in whole, is not permitted unless authorised by Volkswagen AG.

6 Crash sensors

6.1 Tools

Special tools and workshop equipment required

- Pop rivet pliers -VAS 5072-

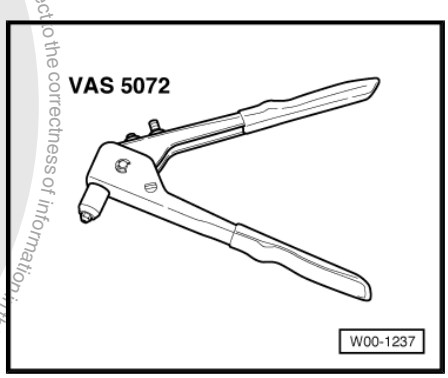

- Torque wrench -V.A.G 1783-

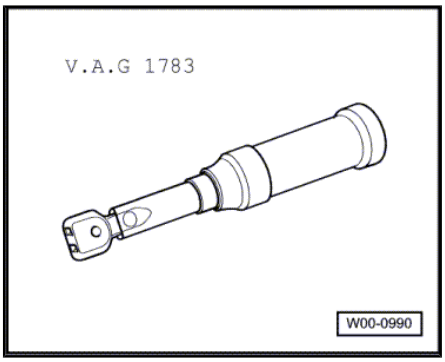

6.2 Removing and installing crash sensors in front doors (Jetta 2005 ▸, Golf Variant 2007 ▸)

Note

Removal and installation is described for right side of vehicle. Follow same instructions for left side as appropriate.

6.2.1 Removing

WARNING

Observe the general safety regulations when working on air-bag, belt tensioner and battery isolator units (pyrotechnic components) *⇒ page 89* .

All vehicles

– Disconnect vehicle battery ⇒ Electrical system; Rep. Gr. 27 ; Disconnecting and reconnecting battery .

– Remove outer door panel ⇒ General body repairs, exterior; Rep. Gr. 57 ; Front door .

Downloaded from www.Manualslib.com manuals search engine

– Disconnect wiring harness -1- from crash sensor -3-.

Vehicles with screwed-on crash sensors

– Remove the two bolts -2- (2.5 Nm) and remove crash sensor -3-.

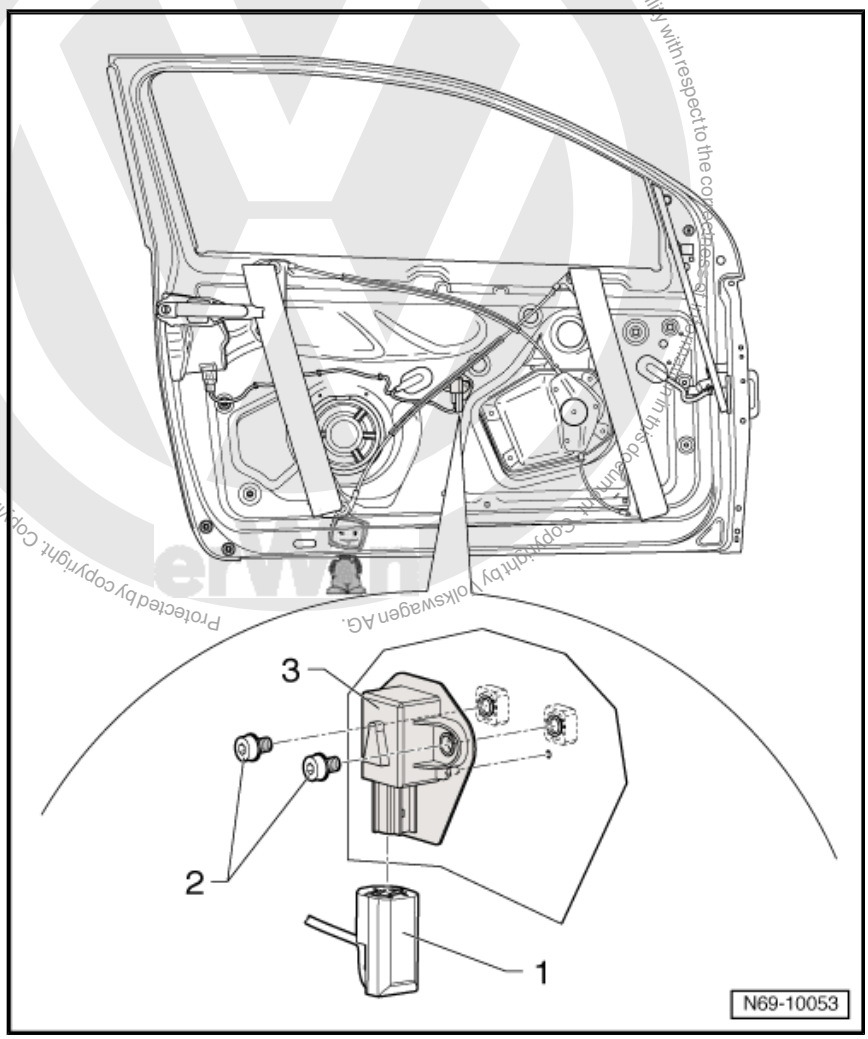

Vehicles with riveted-on crash sensors

– Drill out pop rivet -1-.

– Drill out pop rivet -2-.

– Operate connector locking device and pull connector -4- off crash sensor -3-.

Downloaded from www.Manualslib.com manuals search engine

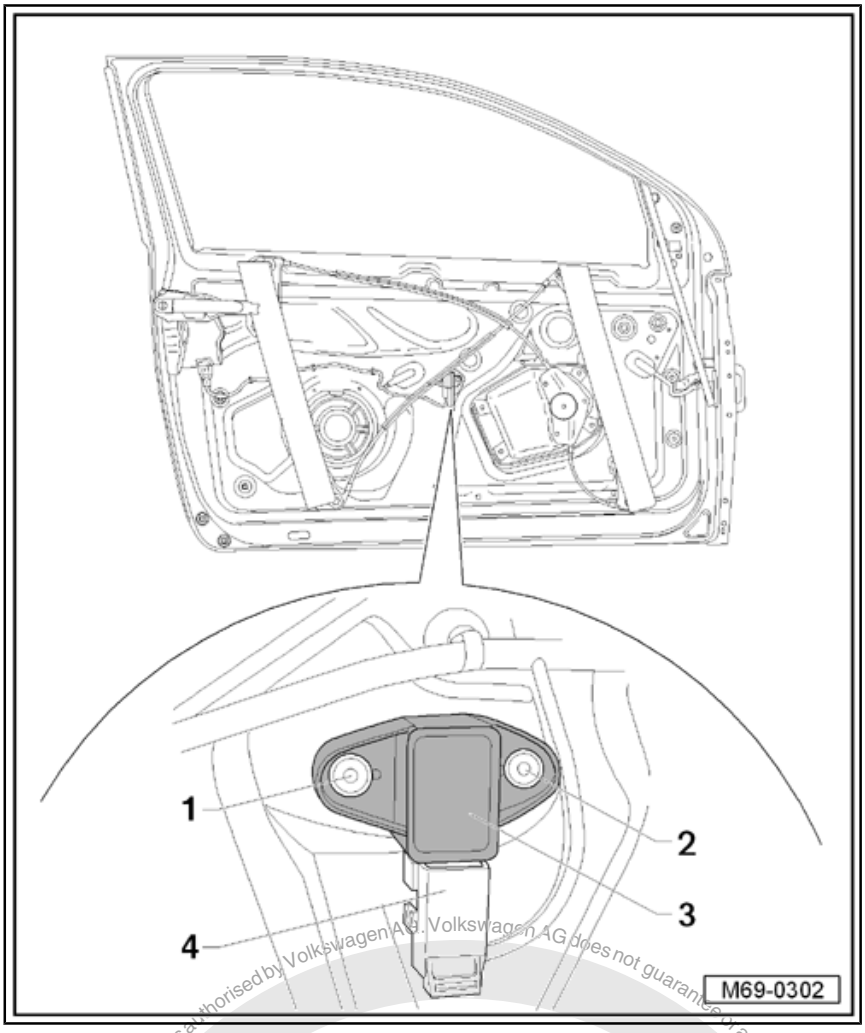

6.2.2 Installing

Vehicles with screwed-on crash sensors

– Install in reverse order of removal.

Vehicles with riveted-on crash sensors

– Connect wiring harness -4- to crash sensor.

– Secure crash sensors to assembly carrier with pop rivets -2-, use pop rivet pliers -VAS 5072- for this.

– Secure crash sensor with pop rivet -1- to assembly carrier as described.

Protected by copyright. Copying for private or commercial purposes, in part or in whole, is not permitted unless authorised by Volkswagen AG. Volkswagen AG does not guarantee or accept any liability with respect to the correctness of information in this document. Copyright by Volkswagen AG.

Downloaded from www.Manualslib.com manuals search engine

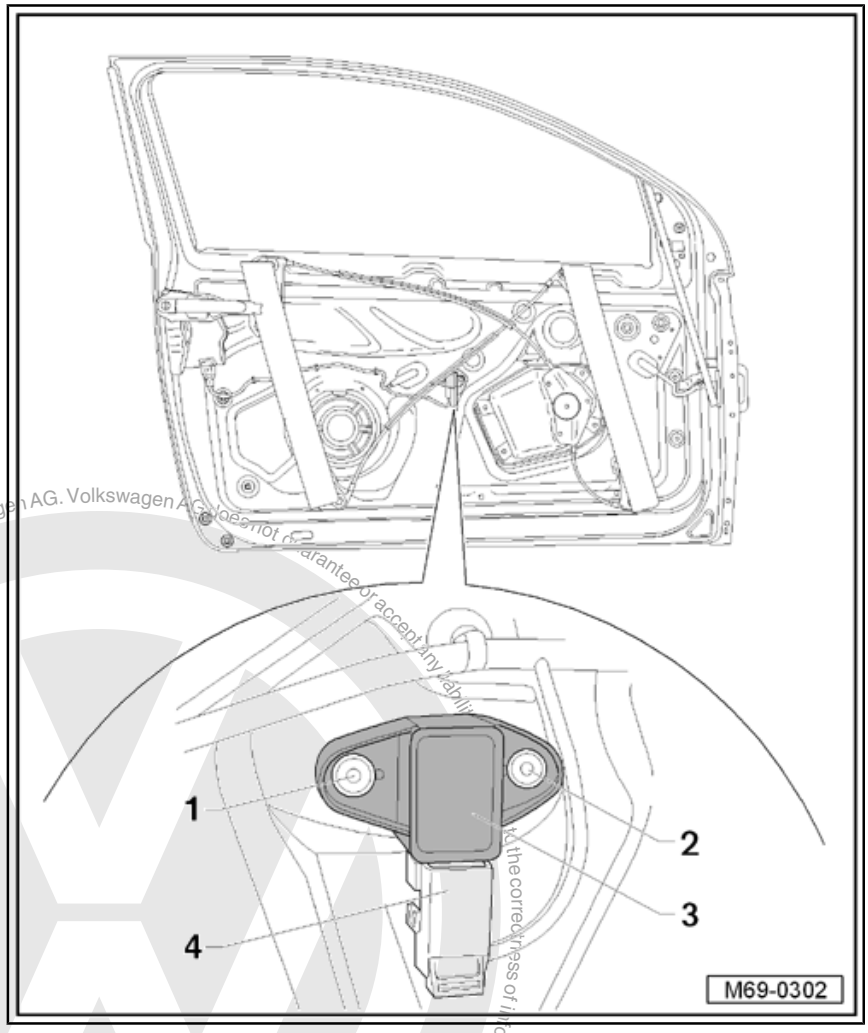

All vehicles

– Switch ignition on.

> **WARNING**
>
> ***Ensure that nobody is in vehicle.***

– Reconnect vehicle battery ⇒ Electrical system; Rep. Gr. 27 ; Disconnecting and reconnecting battery .

6.3 Removing and installing side airbag crash sensor on driver side -G179- (Jetta 2010 ▸, Golf Variant 2010 ▸)

Note

The side airbag crash sensor on driver side -G179- is installed on the front door assembly carrier.

Protected by copyright. Copyright by Volkswagen AG. Volkswagen AG does not guarantee or accept any liability with respect to the correctness of information in this document. Copyright by Volkswagen AG. Copying for private or commercial purposes, in part or in whole, is not permitted unless authorised by Volkswagen AG.

Downloaded from www.Manualslib.com manuals search engine

Removing

WARNING

Observe the general safety regulations when working on airbag, belt tensioner and battery isolator units (pyrotechnic components) ⇒ page 89

- Disconnect vehicle battery ⇒ Electrical system; Rep. Gr. 27 ; Disconnecting and reconnecting battery .
- Remove front door trim ⇒ page 201 .
- Disconnect wiring harness -1- from side airbag crash sensor on driver side -G179- -2-.
- Press fastener -arrow- upwards using a screwdriver and release crash sensor from assembly carrier, arrows -A- and -B-.

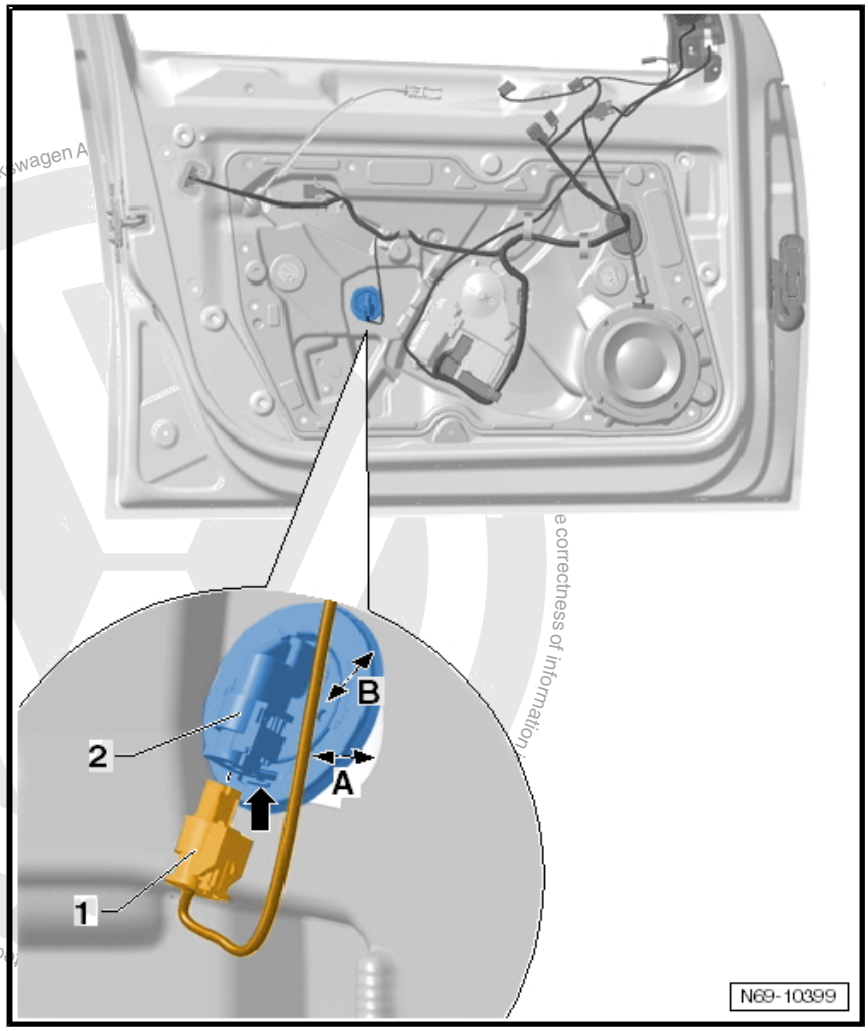

Protected by copyright. Copying for private or commercial purposes, in part or in whole, is not permitted unless authorised by Volkswagen AG
e correctness of information

Installing

- Install in reverse order of removal.
- Switch ignition on.

Downloaded from www.Manualslib.com manuals search engine

WARNING

Ensure that nobody is in vehicle.

– Reconnect vehicle battery ⇒ Electrical system; Rep. Gr. 27 ; Disconnecting and reconnecting battery .

6.4 Removing and installing side airbag crash sensor on front passenger side -G180- (Jetta 2010 ▸, Golf Variant 2010 ▸)

Note

The side airbag crash sensor on front passenger side -G180- is installed on the front door assembly carrier.

WARNING

Observe the general safety regulations when working on airbag, belt tensioner and battery isolator units (pyrotechnic components) *⇒ page 89*

– Disconnect vehicle battery ⇒ Electrical system; Rep. Gr. 27 ; Disconnecting and reconnecting battery .

– Remove front door trim ⇒ page 201 .

Removal and installation of the side airbag crash sensor on front passenger side -G180- is similar to removal and installation of the side airbag crash sensor on driver side -G179- and the same instructions can therefore be derived from these:

♦ Removing and installing side airbag crash sensor on driver side -G179- (Jetta 2010 ▸, Golf Variant 2010 ▸) ⇒ page 173 .

6.5 Removing and installing crash sensors in rear wheel housing (saloon)

Note

Removal and installation is described for right side of vehicle. Follow same instructions for left side as appropriate.

6.5.1 Removing

WARNING

Follow safety precautions when working on airbag.

– Disconnect vehicle battery ⇒ Electrical system; Rep. Gr. 27 ; Disconnecting and reconnecting battery .

– Remove bench seat ⇒ page 284 .

– Remove side padding:

♦ With rear side airbags ⇒ page 287

Downloaded from www.Manualslib.com manuals search engine

♦ With no rear side airbags ⇒ page 288

– Remove wheel housing liner ⇒ page 78 .

– Press connector securing device -1- to rear -arrow- and pull connector -2- off crash sensor -4-.

– Remove the two bolts -3- (9 Nm) and remove crash sensor -4-.

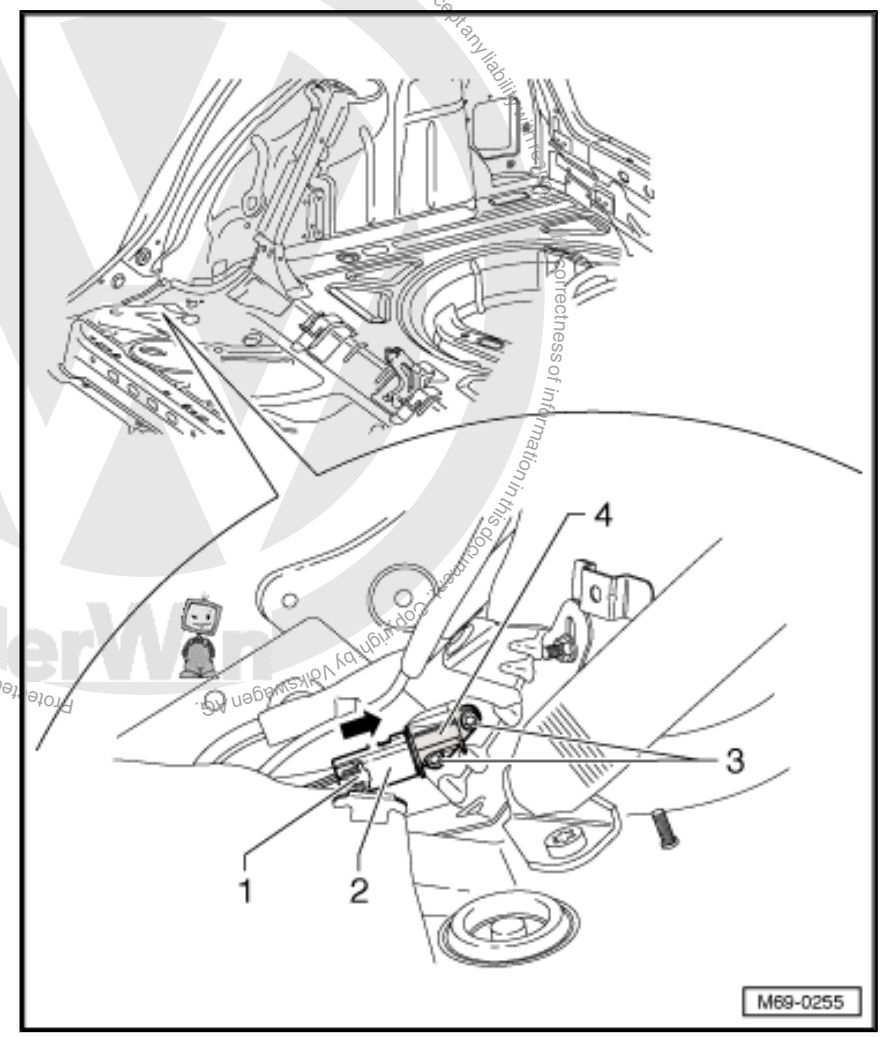

6.5.2 Installing

– Install in reverse order of removal.

– Switch ignition on.

> ⚠ **WARNING**
>
> ***Ensure that nobody is in vehicle.***

– Reconnect vehicle battery ⇒ Electrical system; Rep. Gr. 27 ; Disconnecting and reconnecting battery .

Downloaded from www.Manualslib.com manuals search engine

6.6 Removing and installing crash sensors in rear wheel housing (Variant)

Note

Removal and installation are described for the left vehicle side. Follow same instructions for the right side as appropriate.

6.6.1 Removing

WARNING

Follow safety precautions when working on airbag.

– Disconnect vehicle battery ⇒ Electrical system; Rep. Gr. 27 ; Disconnecting and reconnecting battery .

– Fold bench seat and backrest forwards.

– Remove side padding:

♦ With rear side airbags ⇒ page 287

♦ With no rear side airbags ⇒ page 288

– Remove wheel housing liner ⇒ page 79 .

– Pull wiring harness retainer -1- off stud -4- in direction of -arrow-.

– Pull connector -3- off crash sensor -2-.

– Remove the two bolts -5- (9 Nm) and remove crash sensor -2-.

Protected by copyright. Copying for private or commercial purposes, in part or in whole, is not permitted unless authorised by Volkswagen AG. Volkswagen AG does not guarantee or accept any liability with respect to the correctness of information in this document. Copyright by Volkswagen AG.

Downloaded from www.Manualslib.com manuals search engine

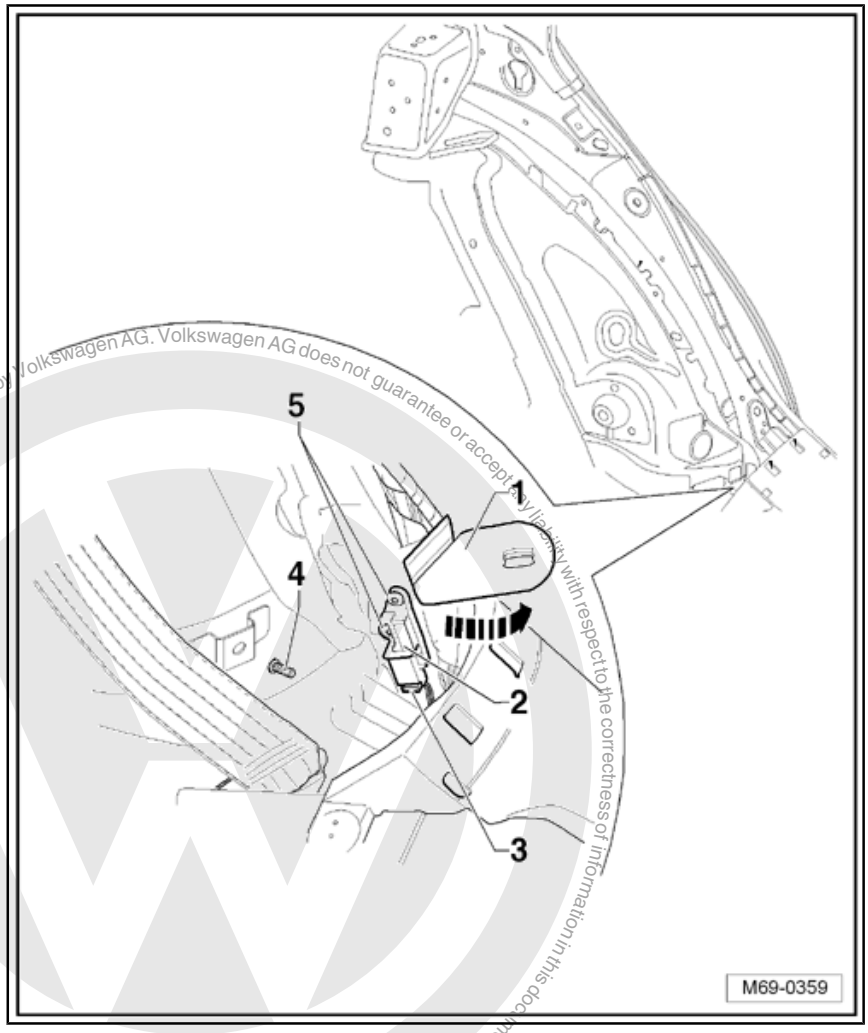

Protected by copyright. Copyright for private or commercial purposes, in part or in whole, is not permitted unless authorised by Volkswagen AG. Volkswagen AG does not guarantee or accept liability with respect to the correctness of information in this document. Copyright by Volkswagen AG.

6.6.2 Installing

– Install in reverse order of removal.
– Switch ignition on.

> ⚠ WARNING
>
> *Ensure that nobody is in vehicle.*

– Reconnect vehicle battery ⇒ Electrical system; Rep. Gr. 27 ; Disconnecting and reconnecting battery .

Downloaded from www.Manualslib.com manuals search engine

70 – Trim, insulation

1 Dash panel

1.1 Tools

1.1.1 Required special tools, workshop equipment, test and measuring devices and auxiliary items

◆ Removal wedge -3409-

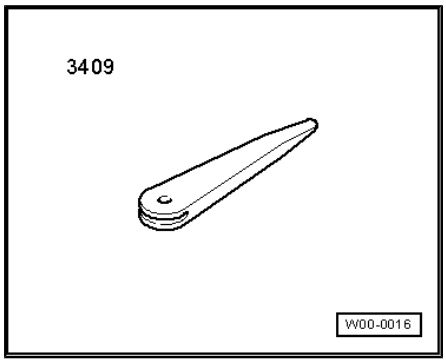

1.2 Removing and installing dash panel

1.2.1 Removing

– Disconnect vehicle battery ⇒ Electrical system; Rep. Gr. 27 ; Disconnecting and reconnecting battery .

– Remove driver airbag unit ⇒ page 116 .

– Remove steering wheel ⇒ Running gear, axles, steering; Rep. Gr. 48 ; Removing and installing steering wheel .

– Remove turn signal switch and windscreen wiper switch ⇒ Electrical system; Rep. Gr. 94 ; Steering column switch .

– Remove cover on side of dash panel ⇒ page 54 .

– Remove centre trim on A-pillars ⇒ page 210 .

– Remove upper trim on A-pillars ⇒ page 209 .

Jetta 2005 ▸, Golf Variant 2007 ▸

– Remove centre cover ⇒ page 72 .

– Remove centre console:

◆ Basic version (Jetta 2005 ▸, Golf Variant 2007 ▸) ⇒ page 7 .

◆ Highline (Jetta 2005 ▸, Golf Variant 2007 ▸) ⇒ page 16 .

– Remove dash panel centre vent ⇒ page 43 .

– Remove dash panel middle trim ⇒ page 51 .

Jetta 2010 ▸, Golf Variant 2010 ▸

– Remove dash panel middle trim (Jetta 2010 ▸, Golf Variant 2010 ▸) ⇒ page 52 .

Protected by copyright. Copying for private or commercial purposes, in part or in whole, is not permitted unless authorised by Volkswagen AG. Volkswagen AG does not guarantee or accept any liability with respect to the correctness of information in this document. Copyright by Volkswagen AG.

Downloaded from www.Manualslib.com manuals search engine

– Remove air conditioner controls unit / heater controls unit trim (Jetta 2010 ‣, Golf Variant 2010 ‣) ⇒ page 53 .

– Remove centre cover (Jetta 2010 ‣, Golf Variant 2010 ‣) ⇒ page 72 .

– Remove centre console:

◆ Basic version (Jetta 2010 ‣, Golf Variant 2010 ‣) ⇒ page 11 .

◆ Highline (Jetta 2010 ‣, Golf Variant 2010 ‣) ⇒ page 25 .

All vehicles

– Remove glove compartment ⇒ page 62 .

Vehicles with radio system

– Remove radio ⇒ Communication; Rep. Gr. 91 .

Jetta 2010 ‣, Golf Variant 2010 ‣

– Remove dash panel centre storage compartment (Jetta 2010 ‣, Golf Variant 2010 ‣) ⇒ page 48 .

All vehicles

Vehicles with navigation

– Remove display and operating unit for navigation ⇒ Communication; Rep. Gr. 91 .

Vehicles with Climatic or Climatronic

– Remove controls for Climatic or Climatronic ⇒ Heating, air conditioning system; Rep. Gr. 87 ; .

Vehicles with heating

Jetta 2010 ‣, Golf Variant 2010 ‣

– Remove dash panel centre vent (Jetta 2010 ‣, Golf Variant 2010 ‣) ⇒ page 49 .

– Remove heating controls ⇒ Heating, air conditioning; Rep. Gr. 80 ; Repairing heating .

All vehicles

– Remove steering column trim ⇒ page 55 .

– Remove steering column electronics control unit -J527- ⇒ Electrical system; Rep. Gr. 94 ; Steering column switch; Removing and installing steering column electronics control unit -J527- .

– Remove airbag coil connector and return ring with slip ring -F138- ⇒ Electrical system; Rep. Gr. 94 ; Steering column switch; Removing and installing airbag coil connector and return ring with slip ring -F138- .

– Remove steering angle sender -G85- ⇒ Electrical system; Rep. Gr. 94 ; Steering column switch; Removing and installing steering angle sender -G85- .

– Remove turn signal switch -E2- ⇒ Electrical system; Rep. Gr. 94 ; Steering column switch; Removing and installing turn signal switch .

– Remove windscreen wiper switch -E- ⇒ Electrical system; Rep. Gr. 94 ; Steering column switch; Removing and installing windscreen wiper switch -E- .

– Remove dash panel insert ⇒ Electrical system; Rep. Gr. 90 ; Dash panel insert .

– Remove left trim on driver side:

Protected by copyright. Copying for private or commercial purposes, in part or in whole, is not permitted unless authorised by Volkswagen AG. Volkswagen AG does not guarantee or accept any liability with respect to the correctness of information in this document. Copyright by Volkswagen AG.

Downloaded from www.Manualslib.com manuals search engine

- ♦ With no storage compartment ⇒ page 56
- ♦ With storage compartment ⇒ page 58

– Remove right trim on driver side ⇒ page 60 .

– Remove footwell cover on driver side ⇒ page 67 .

Vehicles with mobile telephone holder on dash panel

– Disconnect wiring harness to mobile telephone holder ⇒ Communication; Rep. Gr. 91 ; Telephone systems; Preparation for telephone system/universal telephone system; Removing and installing telephone holder

– Remove bolts for fuse holder ⇒ Electrical system; Rep. Gr. 97 ; Removing and installing fuse holder . Fuse holder is not removed, it remains in vehicle.

– If sunlight penetration photosensor -G107- or sunlight penetration photosensor 2 -G134- is fitted, remove it ⇒ Heating, air conditioning; Rep. Gr. 87 ; Climatronic - air conditioning with automatic regulation; Removing sunlight penetration photosensor -G107- or sunlight penetration photosensor 2 -G134- .

Jetta 2010 ▸, Golf Variant 2010 ▸

– Remove knee airbag (Jetta 2010 ▸, Golf Variant 2010 ▸) ⇒ page 124 .

– Remove the two bolts -arrows- (1.5 Nm).

All vehicles

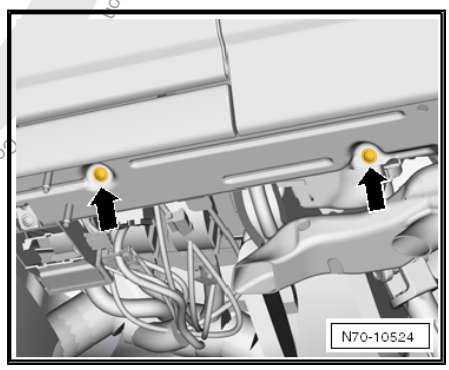

– Remove the two bolts -1- (9 Nm) from front passenger airbag.

– Remove bolts -2-, -3- and -4- (3 Nm).

Protected by copyright. Copying for private or commercial purposes, in part or in whole, is not permitted unless authorised by Volkswagen AG. Volkswagen AG does not guarantee or accept any liability with respect to the correctness of information. Copyright by Volkswagen AG.

Downloaded from www.Manualslib.com manuals search engine

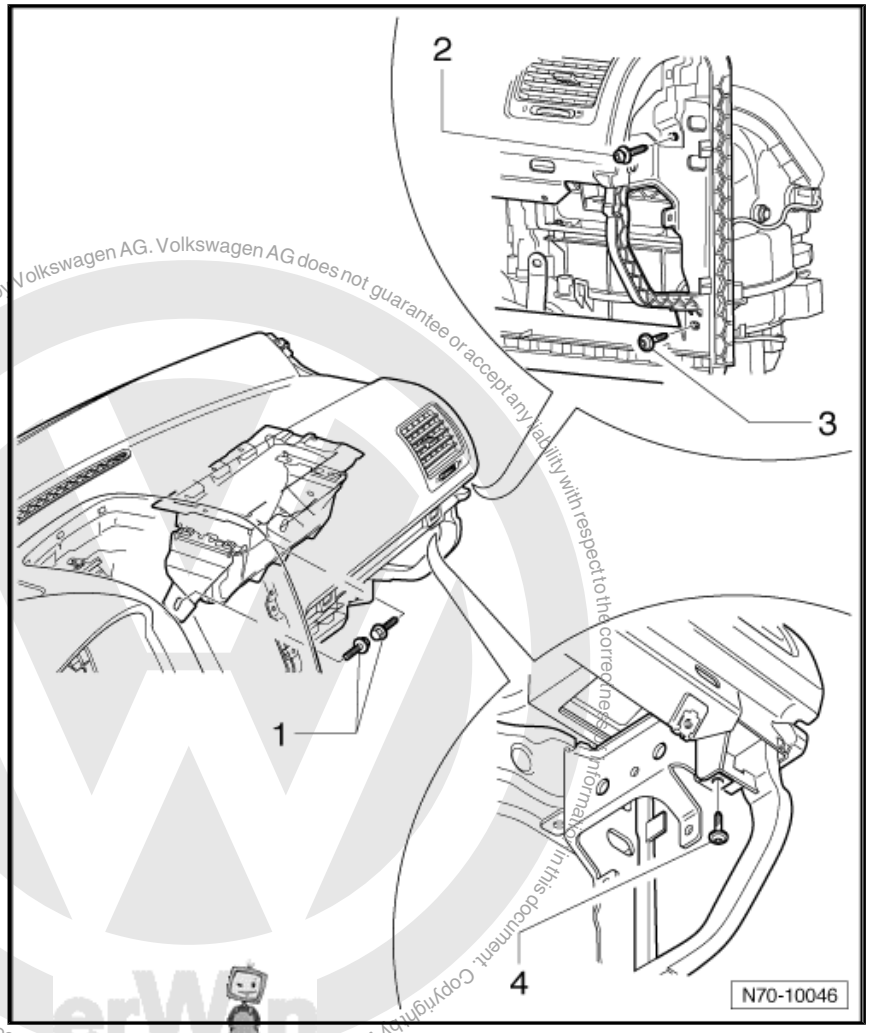

Protected by copyright. Copying for private or commercial purposes, in part or in whole, is not permitted unless authorised by Volkswagen AG. Volkswagen AG does not guarantee or accept any liability with respect to the correctness of information in this document. Copyright by Volkswagen AG.

– Remove bolts -1- (1.5 Nm).
– Remove bolts -2- (10 Nm) and remove bracket -3-.

Downloaded from www.Manualslib.com manuals search engine

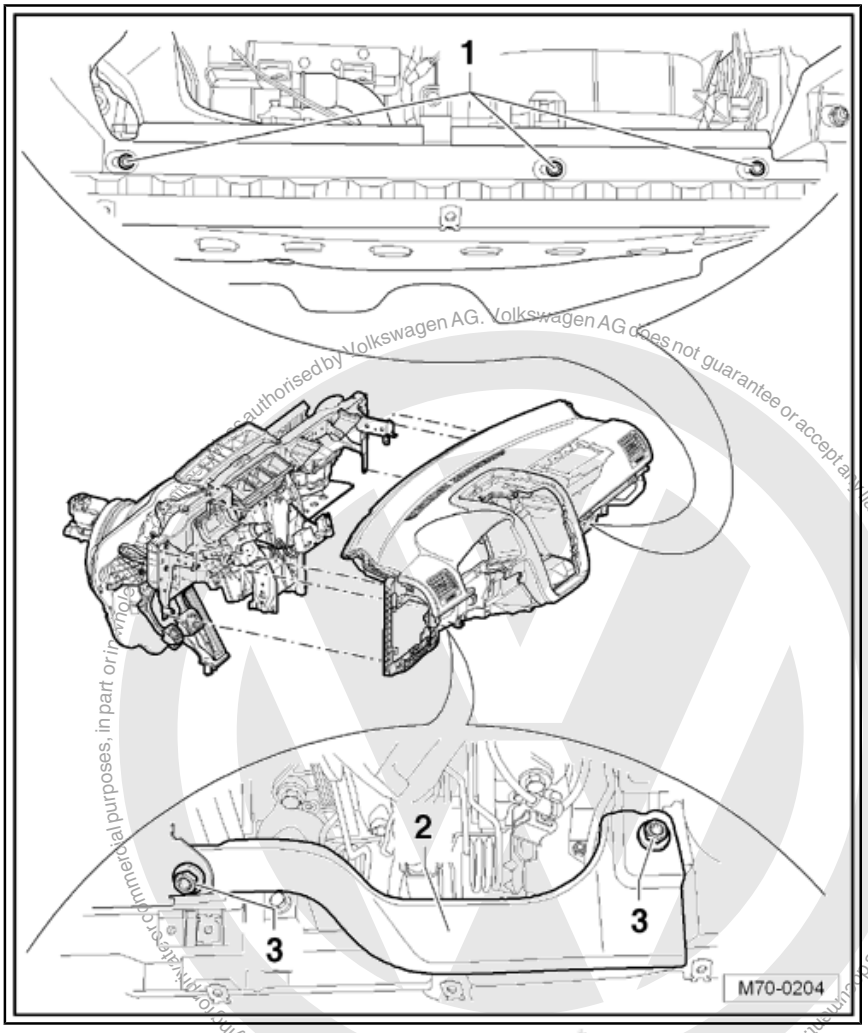

– Remove bolts -1- and -2- (3 Nm).

Protected by copyright. Copyright by Volkswagen AG.
Copyright by Volkswagen AG. Volkswagen AG does not guarantee or accept any liability with respect to the correctness of information in this document.
Copying for private or commercial purposes, in part or in whole, is not permitted unless authorised by Volkswagen AG.

Downloaded from www.Manualslib.com manuals search engine

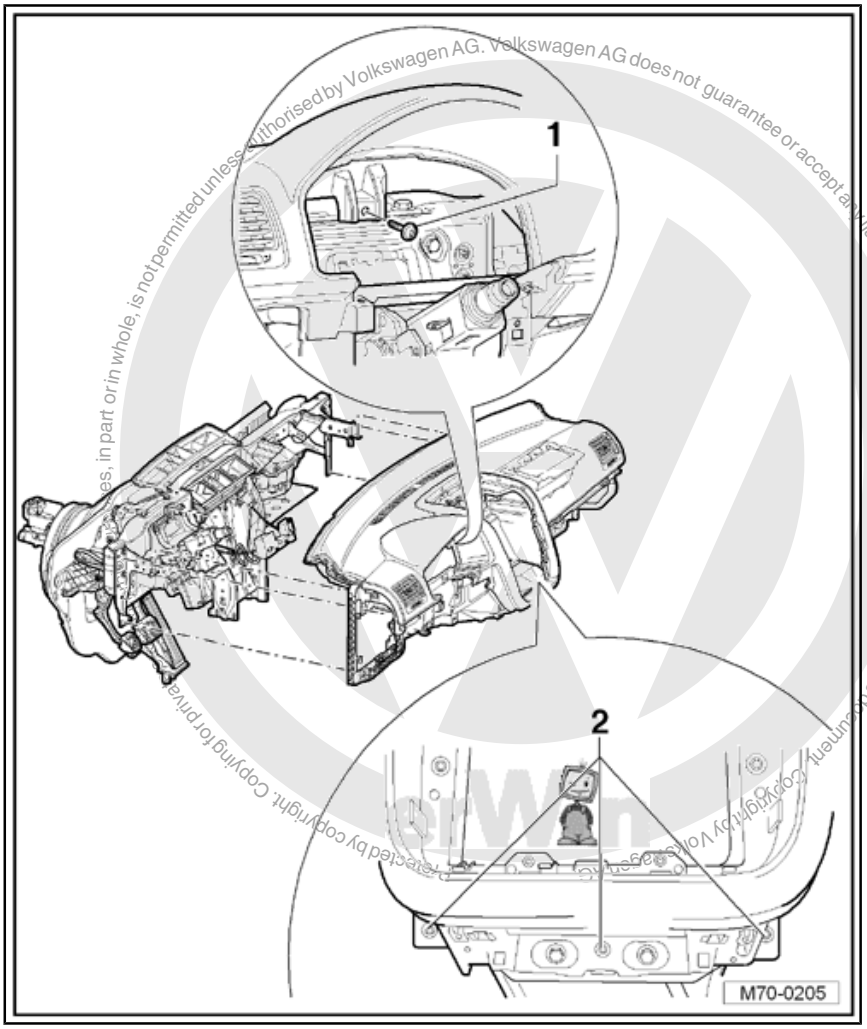

– Remove bolts -1-, -2- and -3- (3 Nm).

Downloaded from www.Manualslib.com manuals search engine

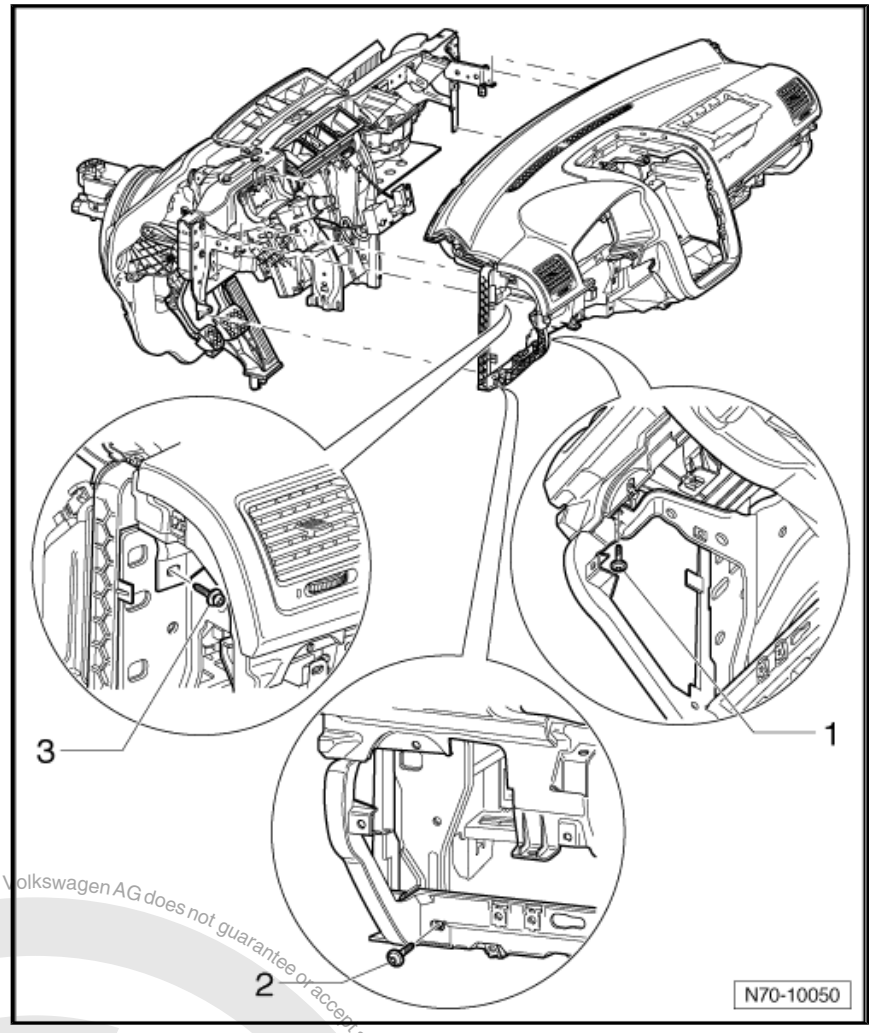

– Pull dash panel out of mountings -1- in area of transition to windscreen.
– Release respective wiring harnesses (dependent on vehicle equipment) and take dash panel out of vehicle with assistance of a second mechanic.

Note

When installing dash panel, ensure that dash panel is positioned exactly in mountings -1-.

Protected by copyright. Copying for private or commercial purposes, in part or in whole, is not permitted unless authorised by Volkswagen AG. Volkswagen AG does not guarantee or accept any liability with respect to the correctness of information in this document. Copyright by Volkswagen AG.

Downloaded from www.Manualslib.com manuals search engine

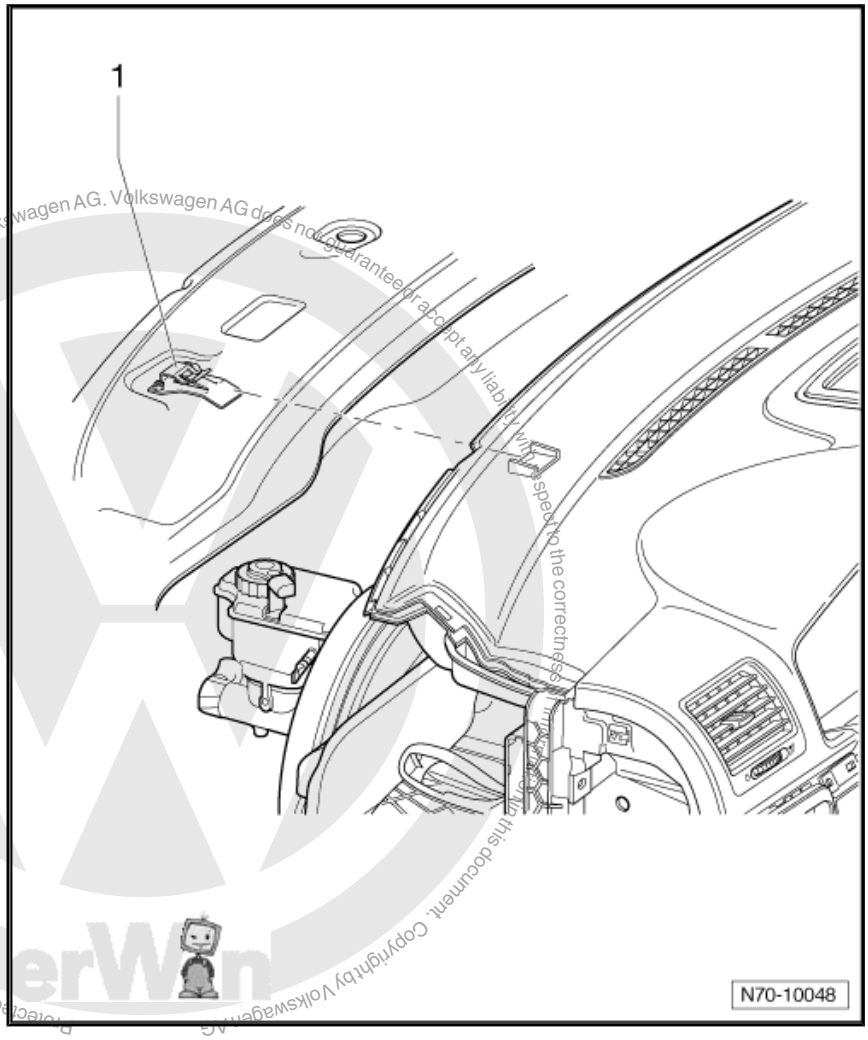

Protected by copyright. Copying for private or commercial purposes, in part or in whole, is not permitted unless authorised by Volkswagen AG. Volkswagen AG does not guarantee or accept any liability with respect to the correctness of information in this document. Copyright by Volkswagen AG

1.2.2 Installing

– Install in reverse order of removal.

1.3 Removing and installing dash panel cross member (right-hand drive vehicles)

1.3.1 Removing

If you release or remove and install electrical cables, produce sketches or take photos. This guarantees installation in the original position.

– Disconnect vehicle battery ⇒ Electrical system; Rep. Gr. 27 ; Disconnecting and reconnecting battery .

– Remove dash panel ⇒ page 179 .

Jetta 2010 ▸, Golf Variant 2010 ▸

– Remove footwell vent on driver side ⇒ Heating, air conditioning; Rep. Gr. 80 ; Repairing heating system; Passenger compartment heating; Removing and installing vents; Removing footwell vent on driver side .

Downloaded from www.Manualslib.com manuals search engine

– Remove knee airbag bracket (Jetta 2010 ▸, Golf Variant 2010 ▸), right-hand drive vehicles ⇒ page 128 .

All vehicles

– Remove wiper arms ⇒ Electrical system; Rep. Gr. 92 ; Windscreen wiper system; Removing and installing windscreen wiper system; Removing wiper arms .

– Remove plenum chamber cover ⇒ General body repairs, exterior; Rep. Gr. 50 ; Plenum chamber cover; Removing plenum chamber cover .

– Loosen bolt -1- in plenum chamber by 5 to 6 rotations (20 Nm).

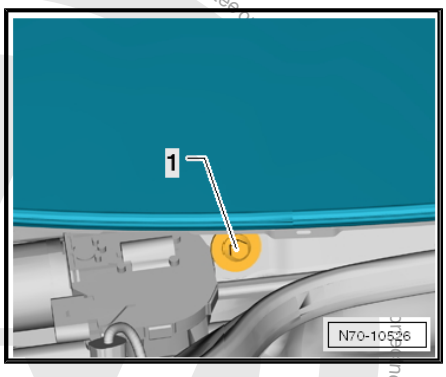

– Press out the two spreader pins -3- upwards.

– Pull out both spreader rivets -2-.

– Remove intermediate pieces -1- and -4- from heater and air conditioning unit.

Protected by copyright. Copying for private or commercial purposes, in part or in whole, is not permitted unless authorised by Volkswagen AG. Volkswagen AG does not guarantee the correctness of information in this document. Copyright by Volkswagen AG.

Downloaded from www.Manualslib.com manuals search engine

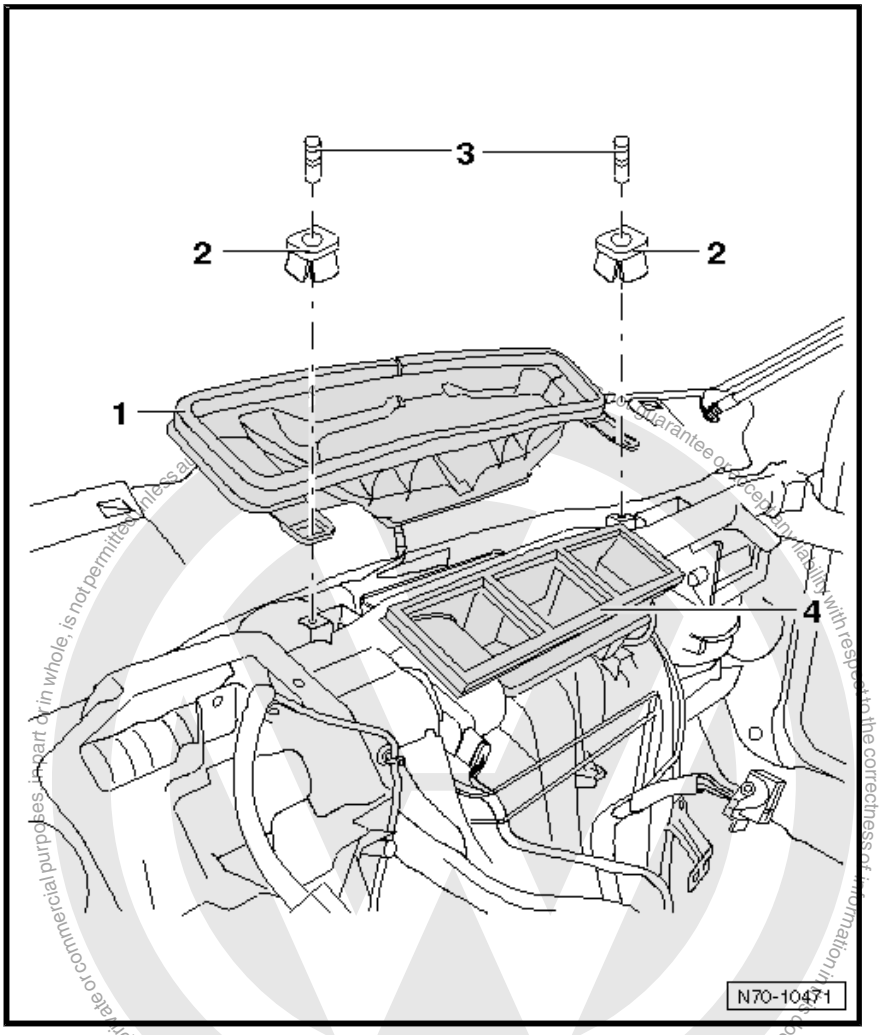

Produced by copyright. Copying for private or commercial purposes, in part or in whole, is not permitted unless authorized. No guarantee or acceptance of liability with respect to the correctness of information in this document. Copyright by Volkswagen AG.

Note

When removing cross member, note position of electrical wires and their attachment; produce sketches or take photos if necessary!

- Disconnect wiring harness -1- from immobiliser reader coil -D2- .
- Disconnect steering column from cross member ⇒ Running gear, axles, steering; Rep. Gr. 48 ; Steering column and steering wheel; Assembly overview - steering column, left-hand drive vehicles .
- Depending on equipment installed in vehicle, loosen electrical wiring from cross member.

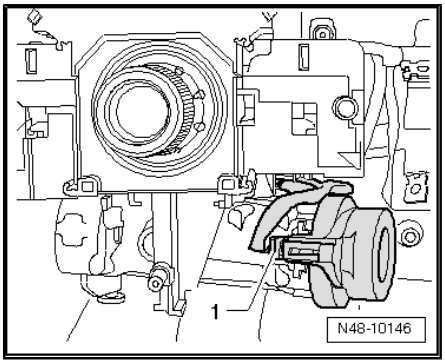

Note

Note position of electrical wires and their attachment; produce sketches or take photos if necessary!

Downloaded from www.Manualslib.com manuals search engine

– Unscrew 2 bolts each on left and right -1- and -2- (20 Nm).

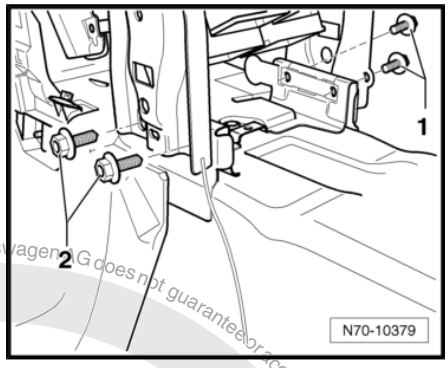

– Remove bolt -1- (20 Nm) above brake pedal and remove strut -2-.

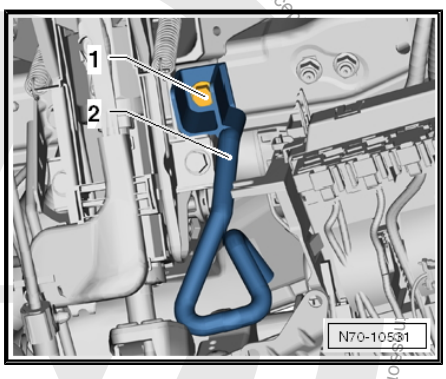

– Remove bolts -1- and -2- (4.5 Nm).
– Remove both bolts -3- and -4- (9 Nm).
– Remove bolts -5- and -6- (4.5 Nm).
– Remove both bolts -7- and -8- (9 Nm).

Protected by copyright. Copying for private or commercial purposes, in part or in whole, is not permitted unless authorised by Volkswagen AG. Volkswagen AG does not guarantee or accept any liability with respect to the correctness of information in this document. Copyright by Volkswagen AG.

Downloaded from www.Manualslib.com manuals search engine

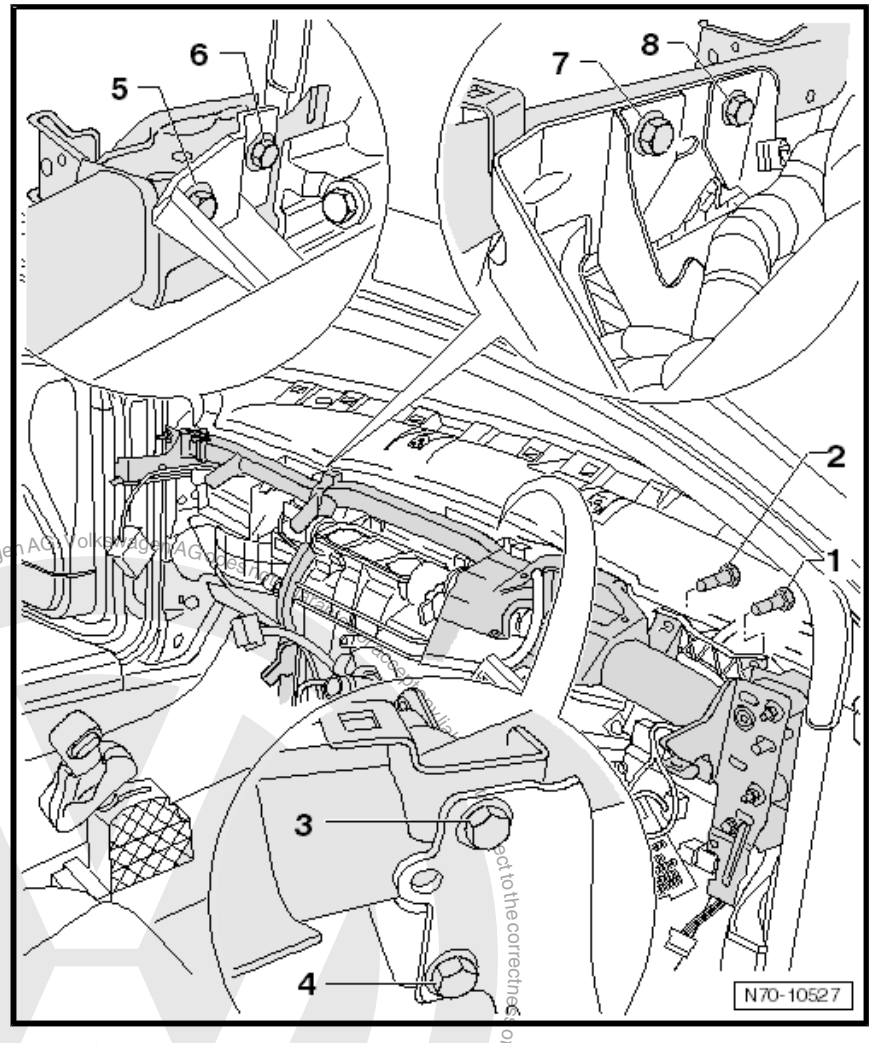

– Remove both bolts -1- and -2- (20 Nm).
– Remove bolt -3- (20 Nm).

Protected by copyright. Copying for private or commercial purposes, in part or in whole, is not permitted unless authorised by Volkswagen AG. Volkswagen AG does not guarantee or assume any liability with respect to the correctness of information in this document. Copyright by Volkswagen AG.

Downloaded from www.Manualslib.com manuals search engine

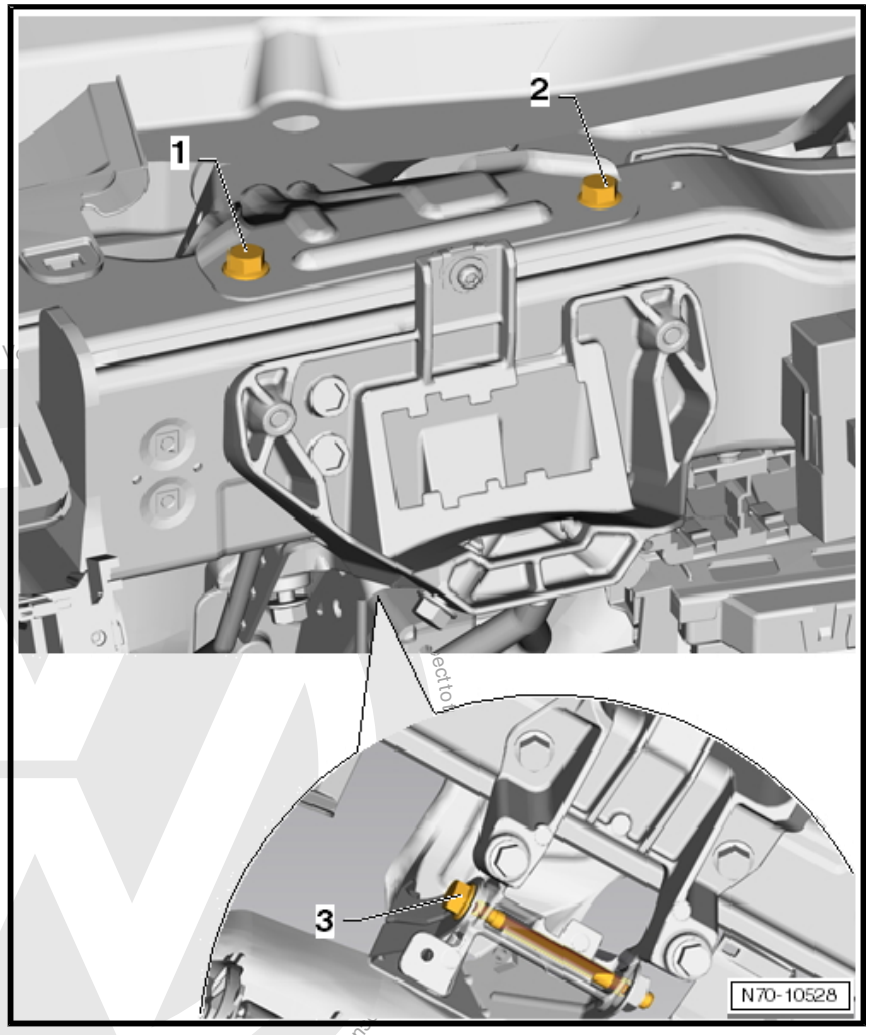

Protected by copyright. Copyright for private or commercial purposes, in part or in whole, is not permitted unless authorised by Volkswagen AG. Copyright by Volkswagen AG.

Note

In area of nuts -1- and -2-, use a scriber to mark vertical and horizontal position of cross member in vehicle.

– Remove nuts -1- and -2- on driver side (20 Nm).

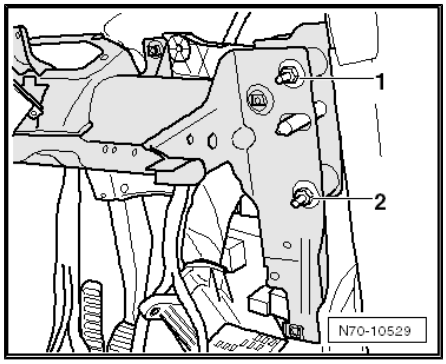

Note

In area of nut -1-, use a scriber to mark vertical and horizontal position of cross member in vehicle.

Downloaded from www.Manualslib.com manuals search engine

– Unscrew nut -1- on front passenger side (20 Nm).
– Release wiring harness fasteners, depending on vehicle equipment level, from cross member.
– With aid of second mechanic, carefully lift cross member -2- out of vehicle.

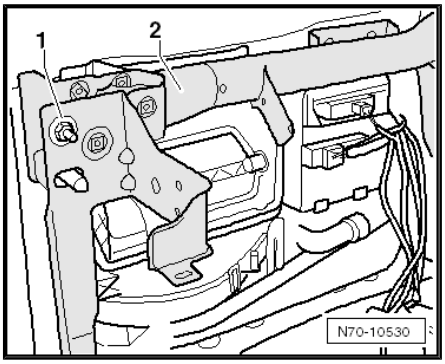

1.3.2 Installing

– Install in reverse order of removal.

Note

Before bolting cross member, align it using marks made during removal.

1.4 Removing and installing dash panel cross member (left-hand drive vehicles)

If you release or remove and install electrical cables, produce sketches or take photos. This guarantees installation in the original position.

1.4.1 Removing

– Disconnect vehicle battery ⇒ Electrical system; Rep. Gr. 27 ; Disconnecting and reconnecting battery .
– Remove dash panel ⇒ page 179 .

Jetta 2010 ▸, Golf Variant 2010 ▸

– Remove knee airbag bracket (Jetta 2010 ▸, Golf Variant 2010 ▸), right-hand drive vehicles ⇒ page 128 .

All vehicles

– Remove wiper arms ⇒ Electrical system; Rep. Gr. 92 ; Windscreen wiper system; Removing and installing windscreen wiper system; Removing wiper arms .
– Remove plenum chamber cover ⇒ General body repairs, exterior; Rep. Gr. 50 ; Plenum chamber cover; Removing and installing plenum chamber cover .
– Unscrew bolt -1- in plenum chamber (20 Nm).

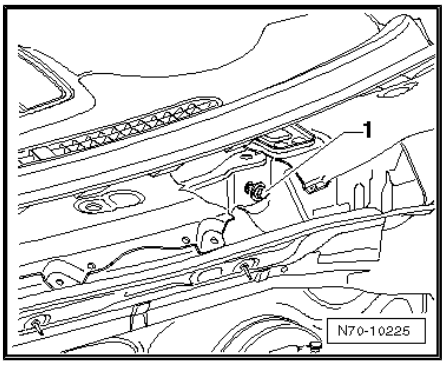

– Press out the two spreader pins -3- upwards.

Downloaded from www.Manualslib.com manuals search engine

– Pull out both spreader rivets -2-.
– Remove intermediate pieces -1- and -4- from heater and air conditioning unit.

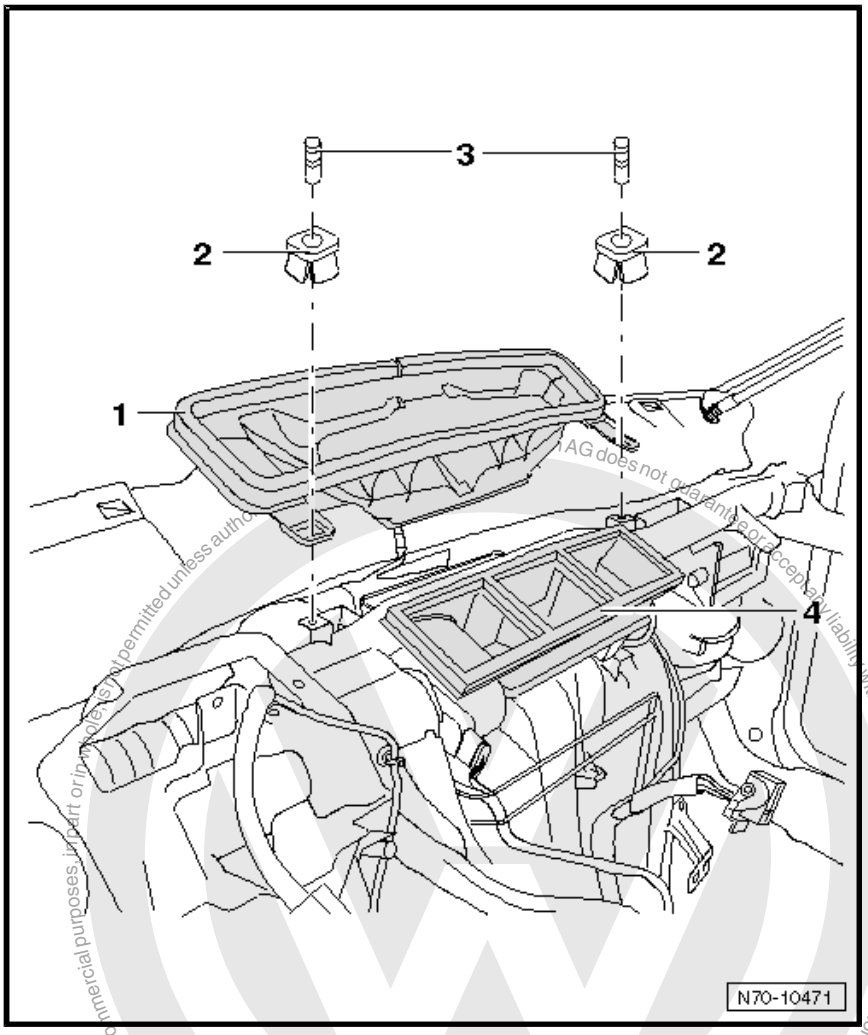

Note

When removing cross member, note position of electrical lines and their attachment; produce sketches or take photos if necessary!

Protected by copyright. Copying for private or commercial purposes, in part or in whole, is not permitted unless authorised by AG. Copyright by Volkswagen AG. AG does not guarantee or accept any liability with respect to the correctness of information in this document.

Downloaded from www.Manualslib.com manuals search engine

– Disconnect wiring harness -1- from immobiliser reader coil - D2- .

– Disconnect steering column from cross member ⇒ Running gear, axles, steering; Rep. Gr. 48 ; Steering column and steering wheel; Assembly overview - steering column, left-hand drive vehicles .

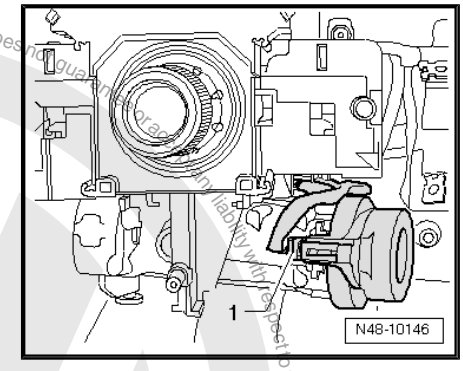

– Release wiring harnesses from cross member -arrows-.

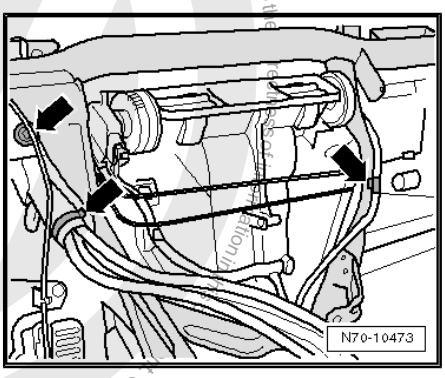

– Separate wiring retainer -1- from cross member on both sides of vehicle -arrow-.

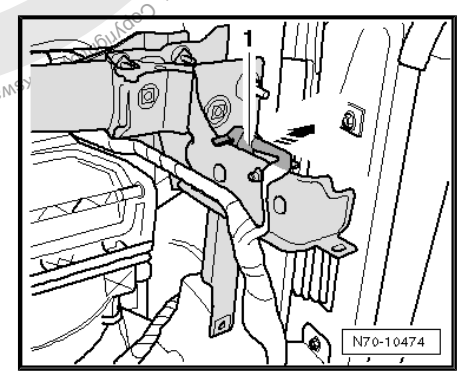

– Unscrew two bolts each on left and right -1- and -2- (20 Nm).

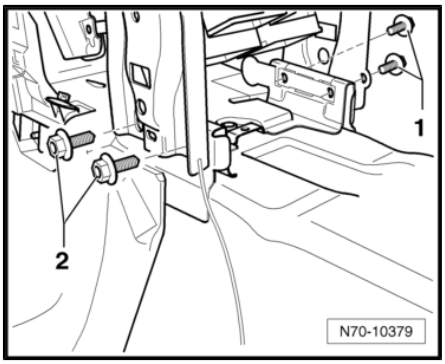

– Remove bolts -1- and -2- (4.5 Nm).

– Unscrew the two nuts -3- and -4- (9 Nm).

– Remove bolts -5- and -6- (4.5 Nm).

– Unscrew the two nuts -7- and -8- (8 Nm).

Downloaded from www.Manualslib.com manuals search engine

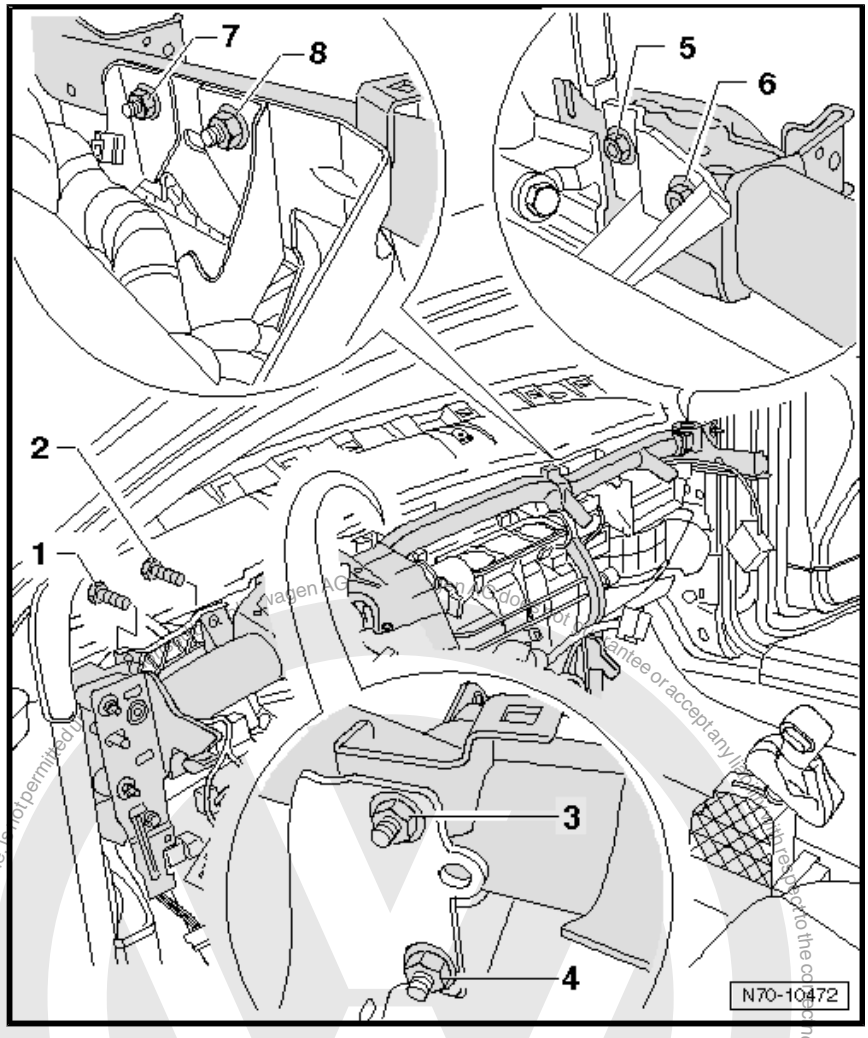

Note

In area of nuts -1- and -2-, use a scriber to mark vertical and horizontal position of cross member in vehicle.

– Unscrew the two nuts -1- and -2- on driver side (20 Nm).

Note

In area of nut -2-, use a scriber to mark vertical and horizontal position of cross member in vehicle.

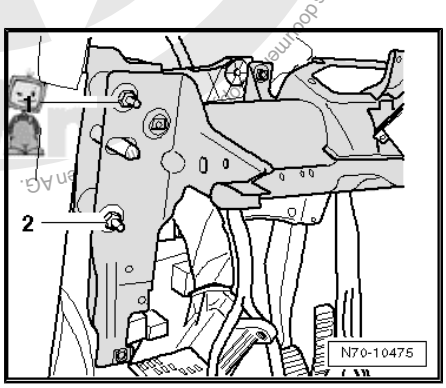

Downloaded from www.Manualslib.com manuals search engine

– Unscrew nut -2- on front passenger side (20 Nm).
– Release wiring harness fasteners, depending on vehicle equipment level, from cross member.
– Pull cross member -1- about 2 cm to the rear.

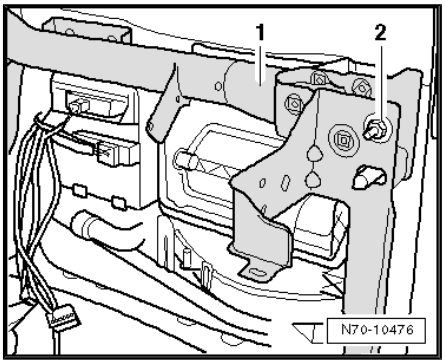

– Remove bolts -1- and -2- (9 Nm).
– Remove support plate -3- from cross member -4-.

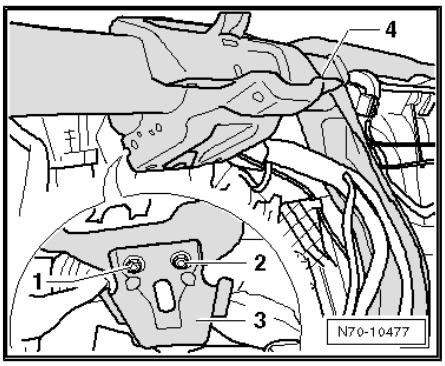

Note

When removing cross member, note position of electrical lines and their attachment; produce sketches or take photos if necessary!

– With aid of second mechanic, carefully lift cross member -4- out of vehicle.

1.4.2 Installing

– Install in reverse order of removal.

Note

Before bolting cross member, align it using marks made during removal.

1.5 Aligning dash panel in vehicle (Jetta 2005 ▸, Golf Variant 2007 ▸)

The height of the dash panel is set correctly when no offset exists between the gap of the door trim -arrow A- and dash panel -arrow B-.

The difference in height between the upper edge of the door trim -1- and the upper edge of the dash panel -2- is 3 mm ±1 mm.

There is no requirement to adjust the position of the dash panel to increase the gap between the door trim and the dash panel -arrow C-.

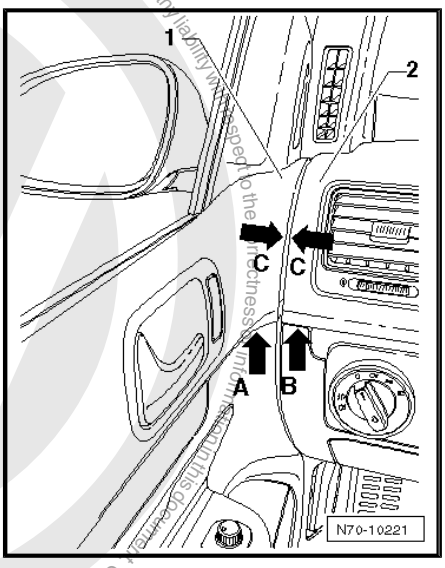

Protected by copyright. Copying for private or commercial purposes, in part or in whole, is not permitted unless authorised by Volkswagen AG. Volkswagen AG does not guarantee or accept any liability with respect to the correctness of information in this document. Copyright by Volkswagen AG.

Downloaded from www.Manualslib.com manuals search engine

– Open door and remove bolt -1- (2 Nm).
– Hold a respectively thick cloth on the left side of the dash panel and close the door.

This action pushes the door trim closer to the door and the gap between the door trim and the dash panel increases respectively. A realignment of the dash panel is therefore not necessary.

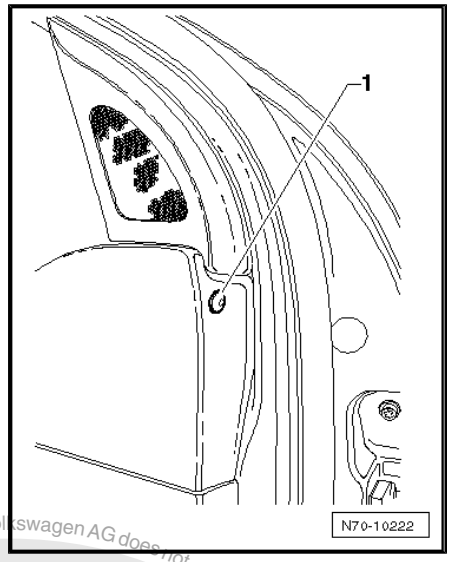

Note

Apply the same procedures for the front passenger side.

Aligning dash panel

The dash panel can be aligned for height and at right angles to the direction of travel.

– Remove wiper arms ⇒ Rep. Gr. 92 .
– Remove plenum chamber cover ⇒ Rep. Gr. 64 .
– Remove dash panel end trim ⇒ page 54 .

– Prise cover -1- out of mounting using removal wedge -3409- .

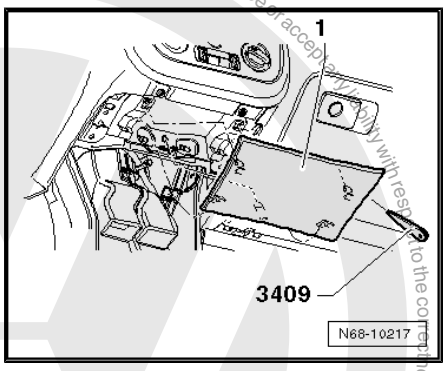

– Unclip cover -1- from trim using a small screwdriver.
– Remove bolt -2- (1.5 Nm).
– Pull left footwell trim -3- out of mountings.

Note

Removal of right footwell trim is identical.

Protected by copyright. Copying for private or commercial purposes, in part or in whole, is not permitted unless authorised by Volkswagen AG. Volkswagen AG does not guarantee or accept any liability with respect to the correctness of information in this document. Copyright by Volkswagen AG.

Downloaded from www.Manualslib.com manuals search engine

Protected by copyright. Copying for private or commercial purposes, in part or in whole, is not permitted unless authorised by Volkswagen AG. Volkswagen AG does not guarantee or accept any liability with respect to the correctness of information in this document. Copyright by Volkswagen AG.

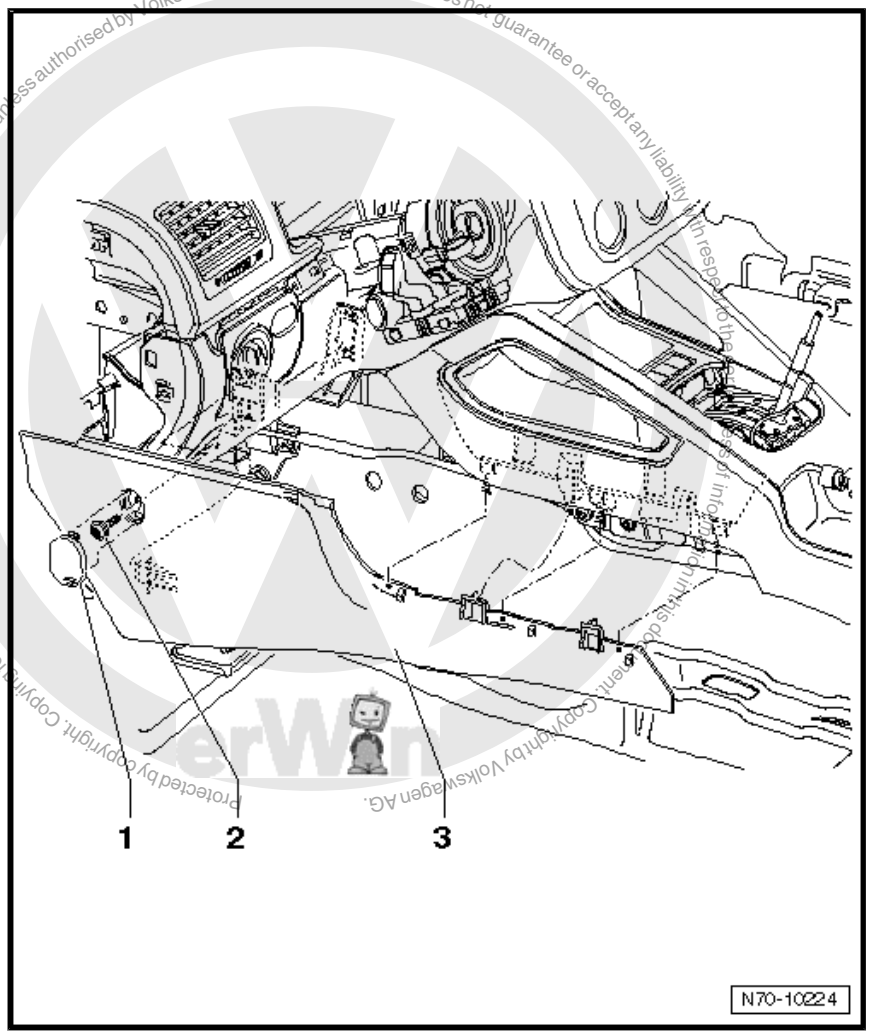

– Loosen bolt -1- in plenum chamber by 2 to 3 turns.

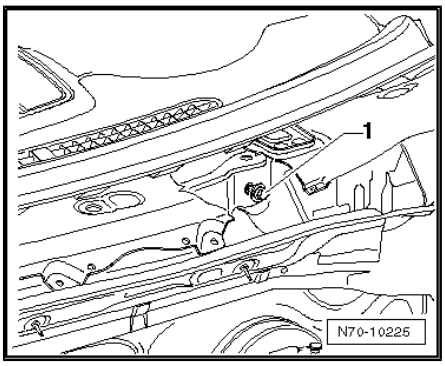

– Loosen the two bolts under the heating/air conditioning controls -1- 2 to 3 turns (9 Nm).

Note

Other bolts in this area need not be loosened.

– Loosen the four bolts -2- in the area of the tunnel 2 to 3 turns (20 Nm).

Downloaded from www.Manualslib.com manuals search engine

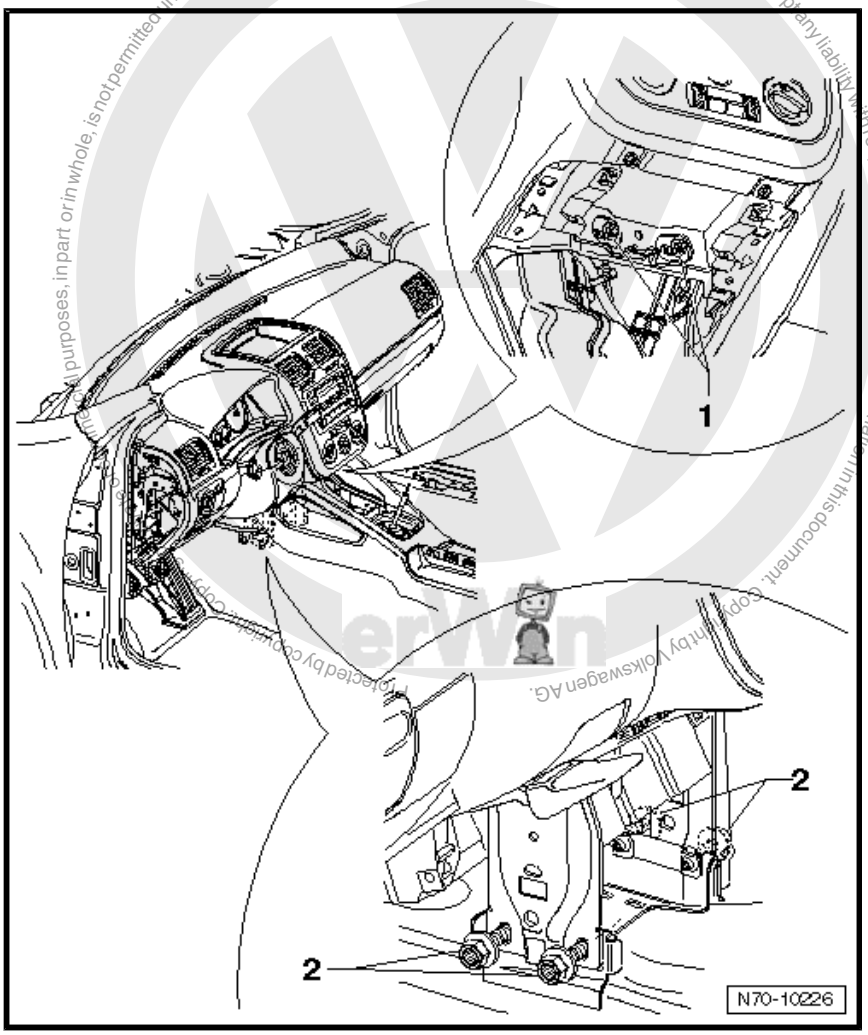

– On the right side loosen the nut -1- 2 to 3 turns (18 Nm).
– On the left side loosen the fuse holder securing bolt -3- (2 Nm).
– Loosen the two nuts -4- 2 to 3 turns (18 Nm).

Aligning height of dash panel

Note

- *The height of the dash panel is set using eccentric bolts -2- and -5-.*
- *In the default position the longer surface of the eccentric faces the outside of the vehicle.*
- *The eccentric must not be turned further than ±90° from the default position.*

– Set the required height of the dash panel using eccentric bolts -2- and -5-.

Aligning dash panel horizontally

– Slide dash panel to desired position.

Downloaded from www.Manualslib.com manuals search engine

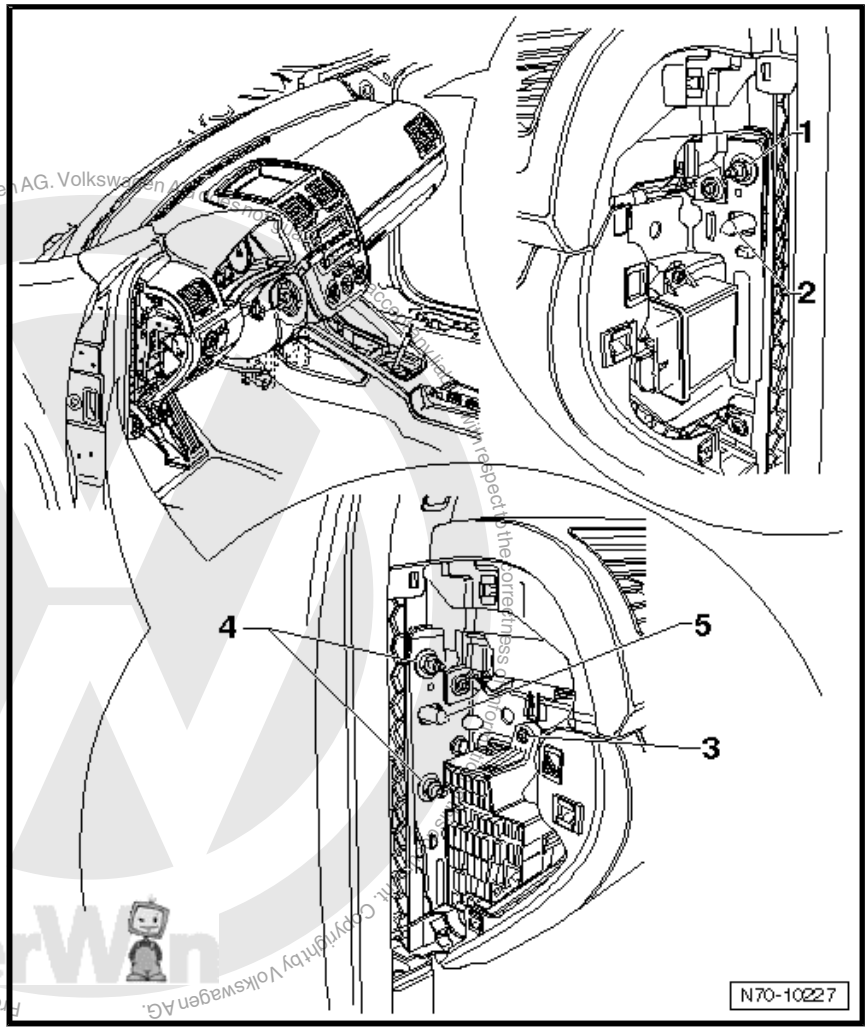

– After aligning in vehicle, bolt dash panel to specified torques.

Installation of parts is carried out in reverse order of removal.

Downloaded from www.Manualslib.com manuals search engine

2 Door trims

2.1 Tools

2.1.1 Required special tools, test and measuring devices and auxiliary items

Removal wedge -3409-

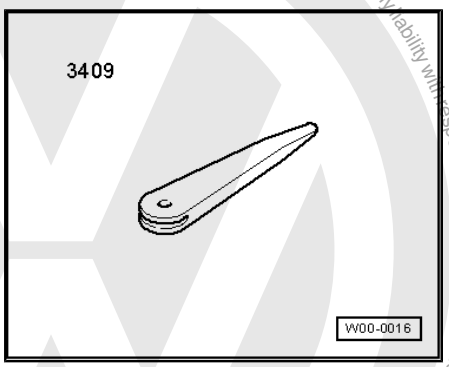

Removal pliers -3392-

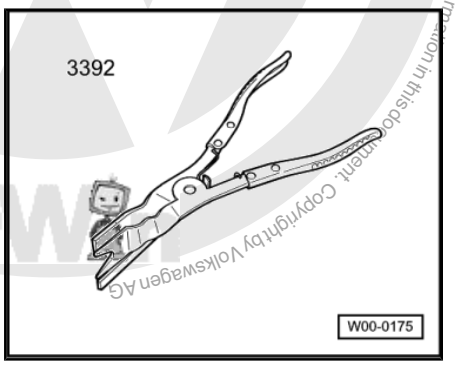

Release tool -T10236-

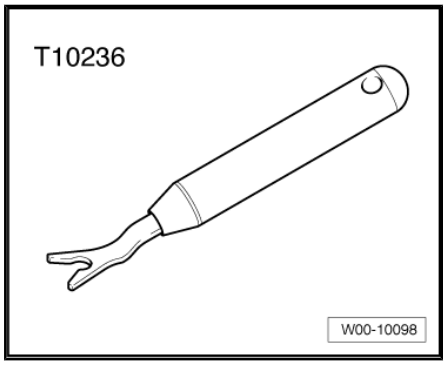

2.2 Removing and installing front door trim on driver side

2.2.1 Removing

– Switch off ignition.

– Using a removal wedge -3409- , lever upper part of door grip moulding -1- upwards out of mountings in door.

Protected by copyright. Copying for private or commercial purposes, in part or in whole, is not permitted unless authorised by Volkswagen AG. Volkswagen AG does not guarantee or accept any liability with respect to the correctness of information in this document. Copyright by Volkswagen AG

Downloaded from www.Manualslib.com manuals search engine

- Disconnect window regulator switch wiring harness from door trim.
- Depending on vehicle equipment, disconnect wiring harnesses from upper part of grip moulding.
- Remove the two bolts -2- in area of grip moulding (1.5 Nm).
- Remove bolt -3- and the three bolts -4- (2 Nm).
- Release lower part of door trim from mountings using removal pliers -3392- .
- Release sides of door trim from mountings using removal pliers -3392- .
- Pull door trim upwards vertically out of window slot seal.
- If vehicle is equipped with a radio system, disconnect wiring harness from loudspeaker.
- Disconnect wiring harness of door trim from door control unit.
- Detach Bowden cable -5- from interior door handle -6-.
- Remove bolt -7- (2 Nm) and lever triangular mirror cover -8- out of fasteners using removal wedge -3409- .
- If vehicle is equipped with a radio system, disconnect loudspeaker wiring harness from cover.

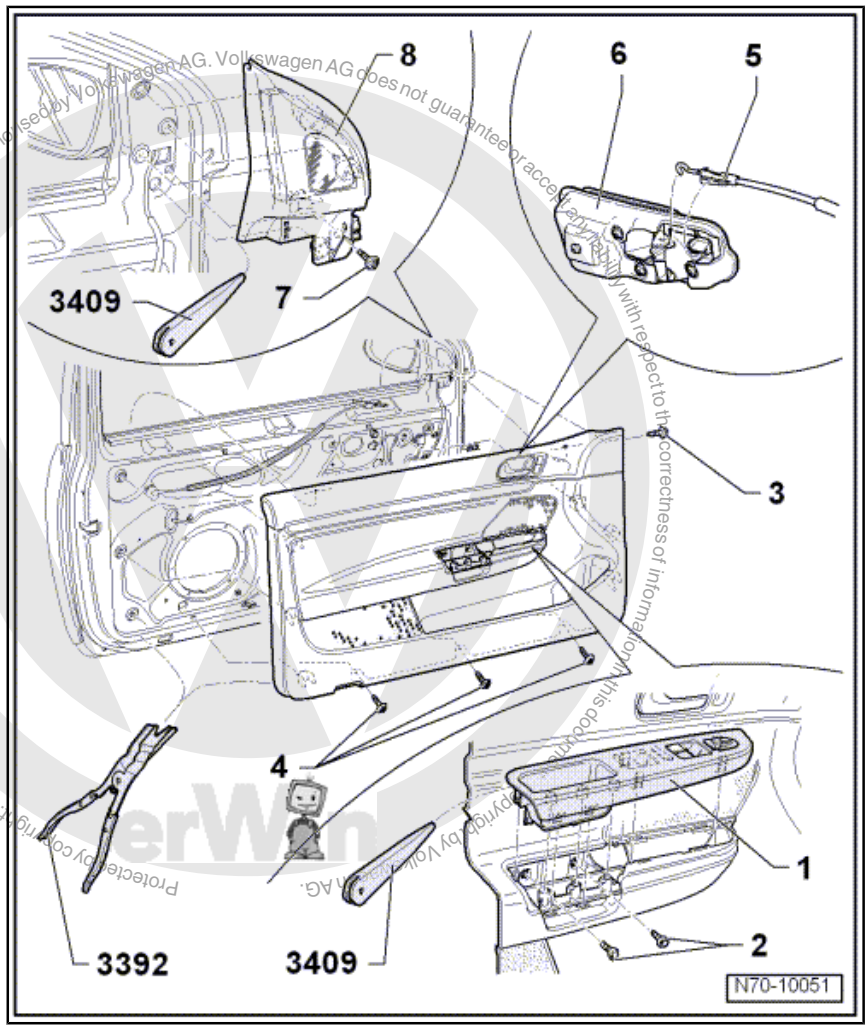

Protected by copyright. Copying for private or commercial purposes, in part or in whole, is not permitted unless authorised by Volkswagen AG. Volkswagen AG does not guarantee or accept any liability with respect to the correctness of information in this document. Copyright by Volkswagen AG.

Downloaded from www.Manualslib.com manuals search engine

2.2.2 Installing

– Install in reverse order of removal.

Note

Before installing, check fasteners for damage and renew if necessary.

2.3 Removing and installing front door trim on passenger side

2.3.1 Removing

– Switch off ignition.

– Using a removal wedge -3409- , lever upper part of grip moulding -1- out of door handle in door trim.

– Disconnect window regulator switch wiring harness from door trim.

– Remove bolts -2- and -3- (1.5 Nm).

– Remove bolt -4- and the three bolts -5- (2 Nm).

– Release lower part of door trim from mountings using removal pliers -3392- .

– Release sides of door trim from mountings using removal pliers -3392- .

– Pull door trim upwards vertically out of window slot seal.

– If vehicle is equipped with a radio system, disconnect wiring harness from loudspeaker.

– Disconnect wiring harness of door trim from door control unit.

– Detach Bowden cable -6- from interior door handle -7-.

– Remove bolt -8- (2 Nm) and lever triangular mirror cover -9- out of fasteners using removal wedge -3409- .

– If vehicle is equipped with a radio system, disconnect loudspeaker wiring harness from cover.

Reproduced by copyright. Copying for private or commercial purposes, in part or in whole, is not permitted unless authorised by Volkswagen AG. Volkswagen AG does not guarantee or accept any liability with respect to the correctness of information in this document. Copyright by Volkswagen AG.

Downloaded from www.Manualslib.com manuals search engine

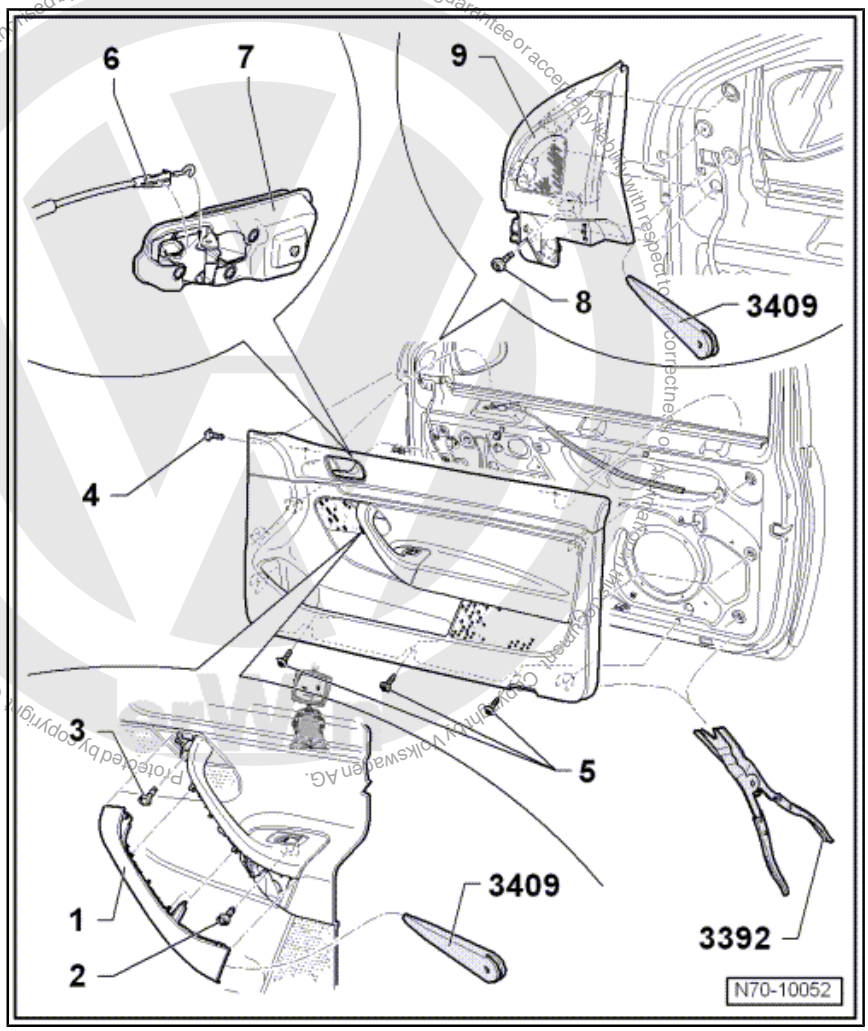

2.3.2 Installing

– Install in reverse order of removal.

Note

Before installing, check fasteners for damage and renew if necessary.

2.4 Removing and installing trim strip in door trim

2.4.1 Removing

Note

Levering out the trim strip must be started in the front area of the door trim.

Downloaded from www.Manualslib.com manuals search engine

– Carefully lever trim strip -1- out of mountings 24 mm from front edge -dimension a- using release tool -T10236- .

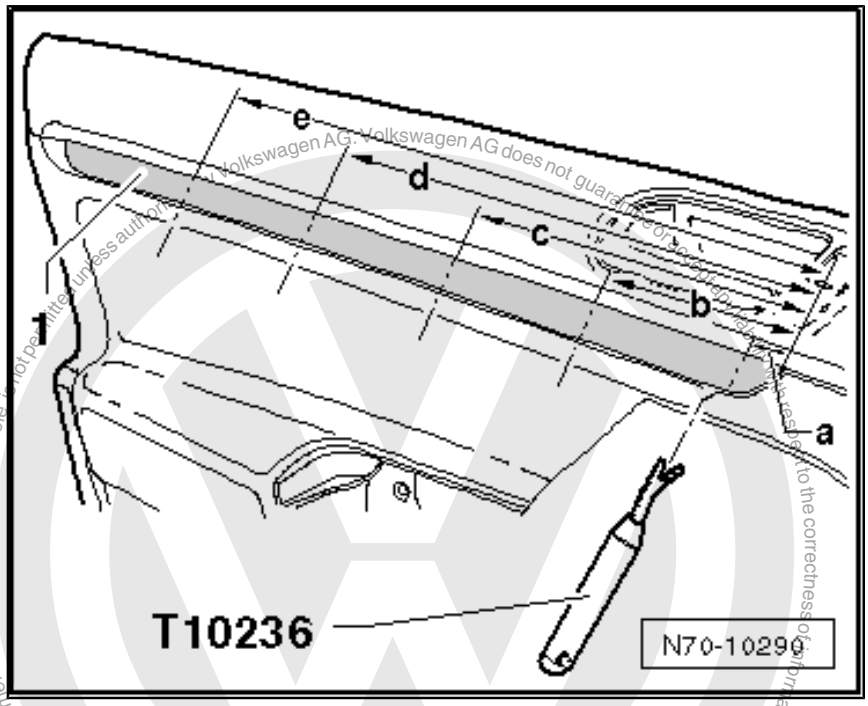

– Lever trim strip out of remaining mountings as described. Dimensions:

- -Dimension b = 120 mm-
- -Dimension c = 230 mm-
- -Dimension d = 338 mm-
- -Dimension e = 445 mm-

– Pull trim strip out of door trim in direction of travel.

2.4.2 Installing

– Install in reverse order of removal.

2.5 Removing and installing rear door trim

Note

Removal and installation of trim is described for the rear right door. Follow same instructions for rear left door trim as appropriate.

2.5.1 Removing

– Switch off ignition.

Only vehicles with manual window regulators

– Remove window crank handle ⇒ page 207 .

– Using a removal wedge -3409- , lever upper part of grip moulding -1- out of door handle in door trim.

Downloaded from www.Manualslib.com manuals search engine

- Disconnect window regulator switch wiring harness from door trim.
- Remove bolts -2- and -3- (1.5 Nm).
- Remove bolt -4- (2 Nm).
- Release lower part of door trim from mountings using removal pliers -3392- .
- Release sides of door trim from mountings using removal pliers -3392- .
- Pull door trim upwards vertically out of window slot seal.
- Depending on vehicle equipment, disconnect wiring harnesses from door trim.
- Detach Bowden cable -5- from interior door handle -6-.

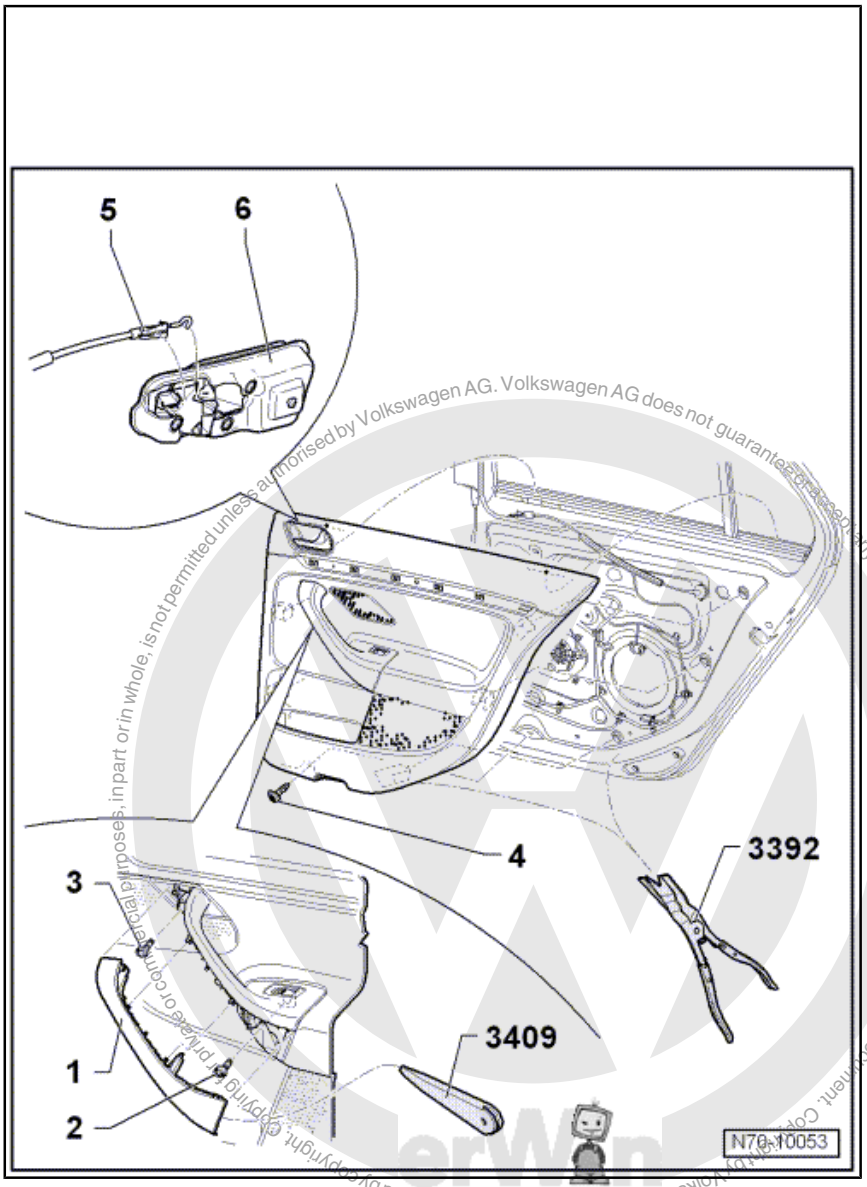

Protected by copyright. Copying for private or commercial purposes, in part or in whole, is not permitted unless authorised by Volkswagen AG. Volkswagen AG does not guarantee or accept any liability with respect to the correctness of information in this document. Copyright by Volkswagen AG.

Downloaded from www.Manualslib.com manuals search engine

Protected by copyright. Copying for private or commercial purposes, in part or in whole, is not permitted unless authorised by Volkswagen AG. Volkswagen AG does not guarantee or accept any liability with respect to the correctness of information in this document. Copyright by Volkswagen AG.

2.5.2 Installing

– Install in reverse order of removal.

Note

Before installing, check fasteners for damage and renew if necessary.

2.6 Removing and installing window crank

2.6.1 Removing

– Press retaining clip -1- forward in direction of travel -arrow- and pull window crank -2- from shaft -3-.

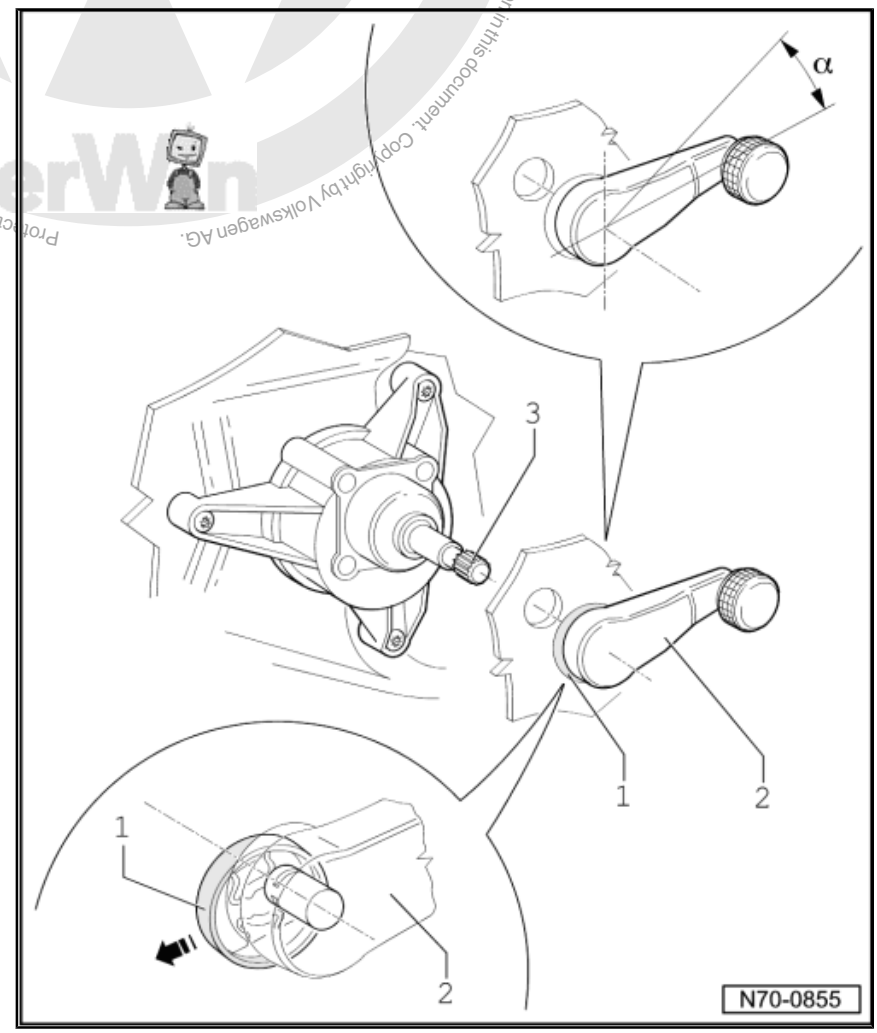

2.6.2 Installing

– Install in reverse order of removal.

Downloaded from www.Manualslib.com manuals search engine

Note

- *After reinstallation, the window crank handle on the right side must be positioned at “5 o'clock” when window is closed.*
- *After reinstallation, the window crank handle on the left side must be positioned at “7 o'clock” when window is closed.*
- *This equates to an installation angle of 30° -angle α-.*
- *Deviation between window cranks must be no more than 6°.*

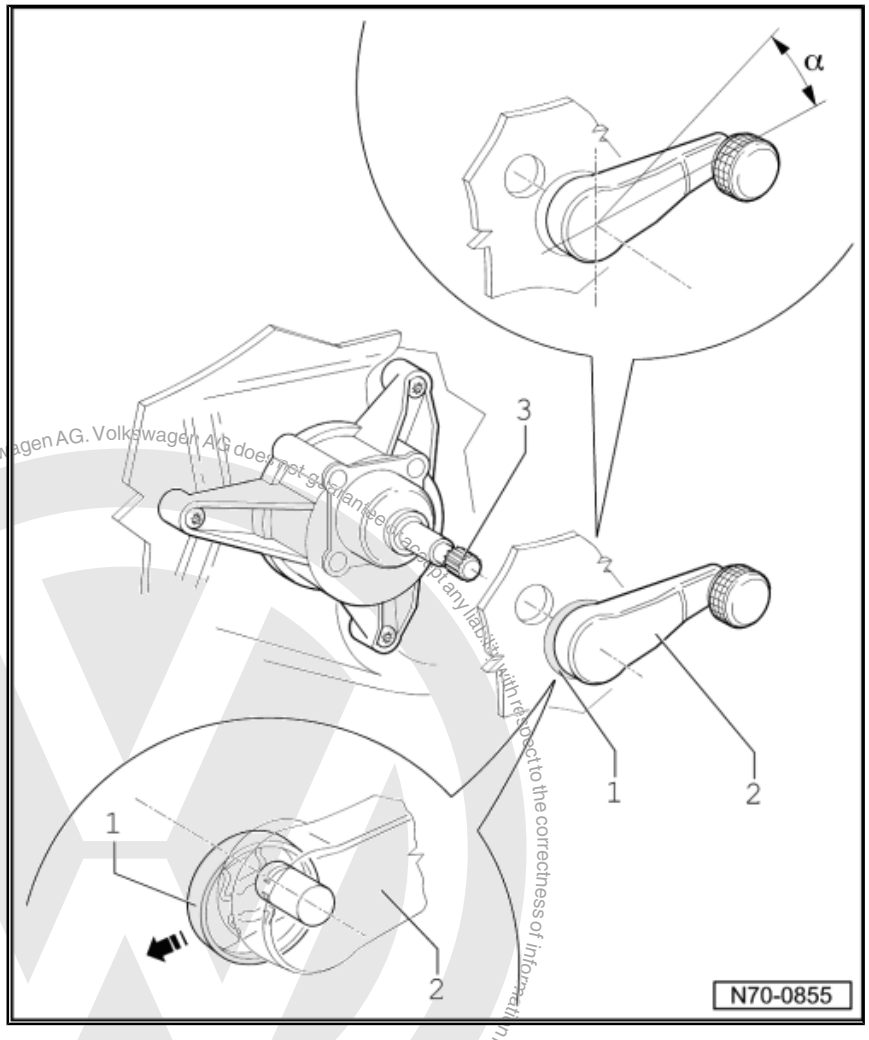

Protected by copyright. Copying for private or commercial purposes, in part or in whole, is not permitted unless authorised by Volkswagen AG. Volkswagen AG does not guarantee or accept any liability with respect to the correctness of information in this document. Copyright by Volkswagen AG.

Downloaded from www.Manualslib.com manuals search engine

3 Pillar and side trims

3.1 Removing and installing upper trim for A-pillar

Note

Removal and installation are described for the left vehicle side.
Follow same instructions for the right side as appropriate.

3.1.1 Removing

- Remove dash panel end trim ⇒ page 54 .
- Remove A-pillar centre trims ⇒ page 210 .
- Remove airbag emblem -1- and unscrew bolt -2- (4 Nm).
- Pull lower section of trim -arrow A- out of securing clips -3-.
- Release trim from door seal beading.
- Pull trim out of forward mountings -arrow B-.
- Pull rear section of trim out of dash panel -arrow C-.

Note

- *When reinstalled, airbag emblem -1- must be renewed.*
- *Before installing, check fasteners for damage and renew if necessary.*

Protected by copyright. Copying for private or commercial purposes, in part or in whole, is not permitted unless authorised. Volkswagen AG does not guarantee or accept any liability with respect to the correctness of information in this document. Copyright by Volkswagen AG.

Downloaded from www.Manualslib.com manuals search engine

Protected by copyright. Copyright for private or commercial purposes, in part or in whole, is not permitted unless authorised by Volkswagen AG. Volkswagen AG does not guarantee or accept any liability with respect to the correctness of information in this document. Copyright by Volkswagen AG.

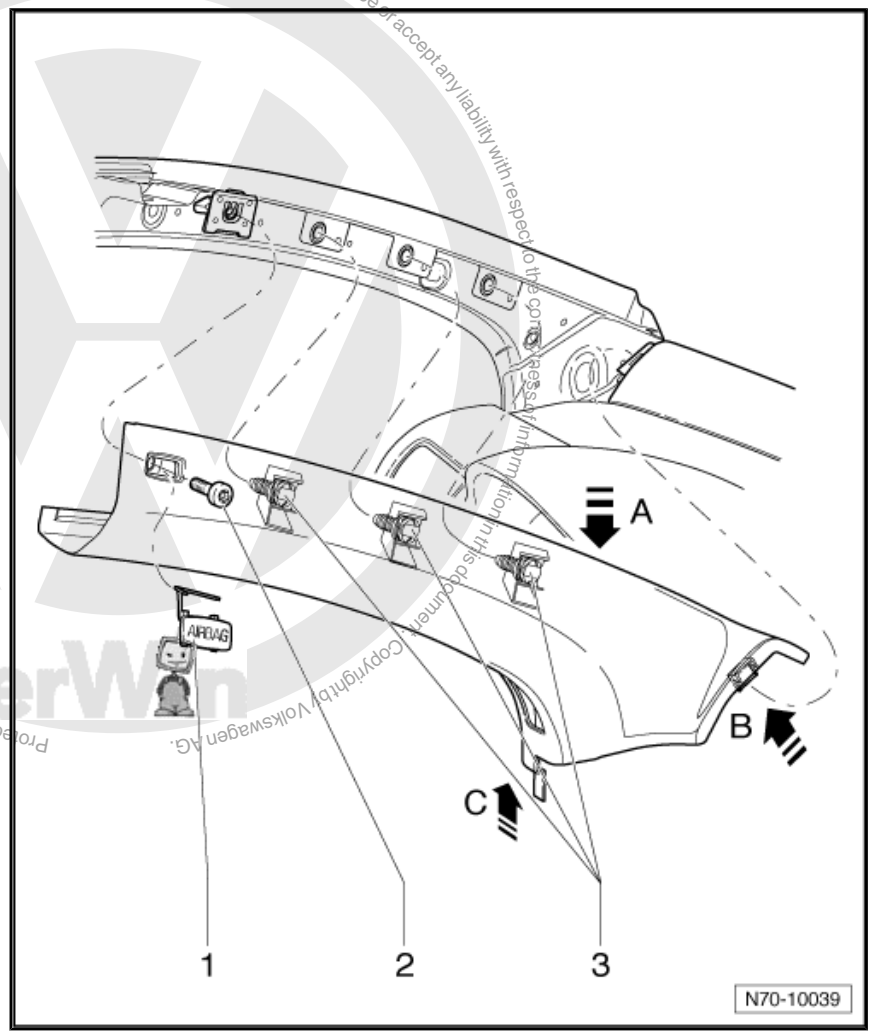

3.1.2 Installing

– Install in reverse order of removal.

3.2 Removing and installing middle trim for A-pillar

Note

Removal and installation are described for the left vehicle side.
Follow same instructions for the right side as appropriate.

3.2.1 Removing

– Remove cover on side of dash panel ⇒ page 54 .

Downloaded from www.Manualslib.com manuals search engine

– Pull trim securing clip -1- out of fastener -2- of upper trim for A-pillar -arrow A-.
– Release trim from door seal beading.
– Pull out trim upwards from lower trim for A-pillar -arrow B-.

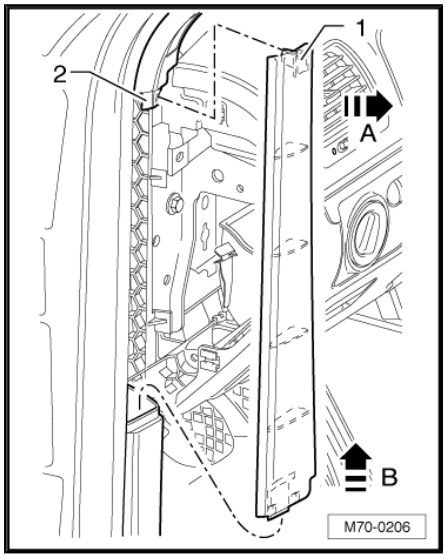

3.2.2 Installing

– Install in reverse order of removal.

Note

Following installation, ensure that trim is positioned in door seal beading.

3.3 Removing and installing lower trim for A-pillar trim on driver side

3.3.1 Removing

– Release sill panel moulding from body in area of overlap to lower A-pillar trim ⇒ page 77 .
– Remove dash panel end trim ⇒ page 54 .
– Remove centre trim for A-pillar ⇒ page 210 .
– Remove bonnet release lever -1- ⇒ General body repairs, exterior; Rep. Gr. 55 ; Bonnet .
– Remove clip -2-.
– Release trim from body -arrow A-.
– Release trim from door seal beading.
– Pull trim out of mountings -arrow B-.

Note

Before installing clip, check clip -2- for damage and renew if necessary.

Protected by copyright. Copying for private or commercial purposes, in part or in whole, not permitted unless authorised by Volkswagen AG. Volkswagen AG does not guarantee or accept any liability with respect to the correctness of information in this document. Copyright by Volkswagen AG.

Downloaded from www.Manualslib.com manuals search engine

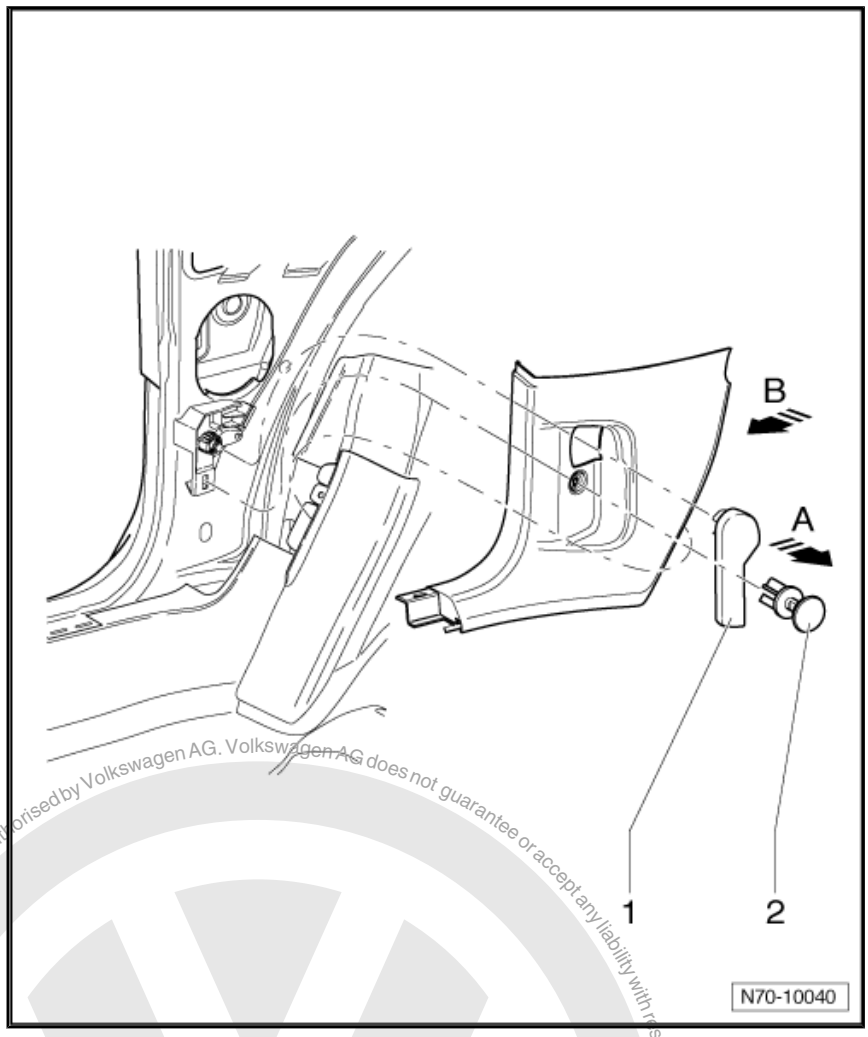

3.3.2 Installing

– Install in reverse order of removal.

3.4 Removing and installing lower trim for A-pillar trim on front passenger side

3.4.1 Removing

– Release sill panel moulding from body in area of overlap to lower trim of A-pillar ⇒ page 77

– Remove cover on side of dash panel ⇒ page 54 .

– Remove centre trim for A-pillar ⇒ page 210 .

Note

For greater clarity, dash panel is not shown in figure.

– Release trim from body -arrow A-.

– Release trim from door seal beading.

Protected by copyright. Copying for private or commercial purposes, in part or in whole, is not permitted unless authorised by Volkswagen AG. Volkswagen AG does not guarantee or accept any liability with respect to the correctness of information in this document. Copyright by Volkswagen AG.

Downloaded from www.Manualslib.com manuals search engine

– Pull trim out of mountings -arrow B-.

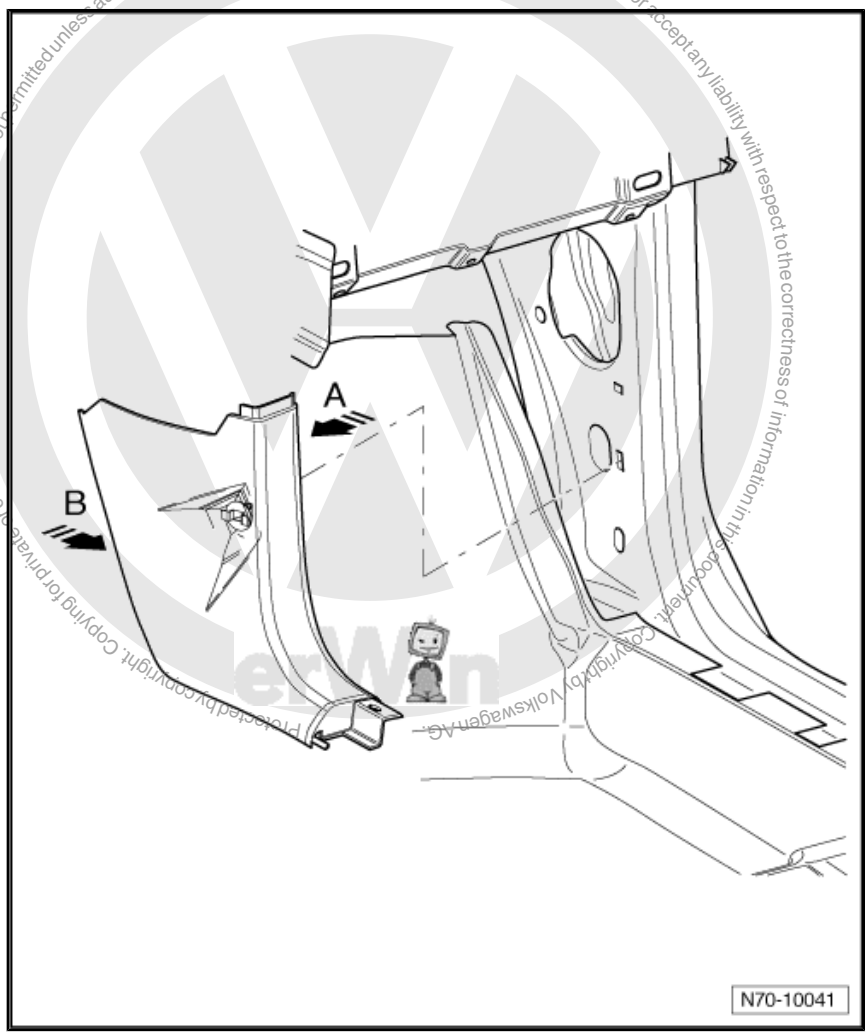

3.4.2 Installing

– Install in reverse order of removal.

3.5 Removing and installing upper B-pillar trim

Note

Removal and installation are described for the left vehicle side.
Follow same instructions for the right side as appropriate.

3.5.1 Removing

– Remove sill panel trim ⇒ page 77 .

– Remove airbag emblem -1- and remove bolt -2- (4 Nm).

Downloaded from www.Manualslib.com manuals search engine

Note

When reinstalling, airbag emblem -1- must be renewed.

- Pull lower section of trim out of mountings in body -arrow A-.
- Release trim from door seal beading.
- Pull out trim from upper mountings -arrow B-.
- Remove belt end fitting from front seat belt
  ⇒ Item 2 (page 91) .
- Guide seat belt through opening in trim.

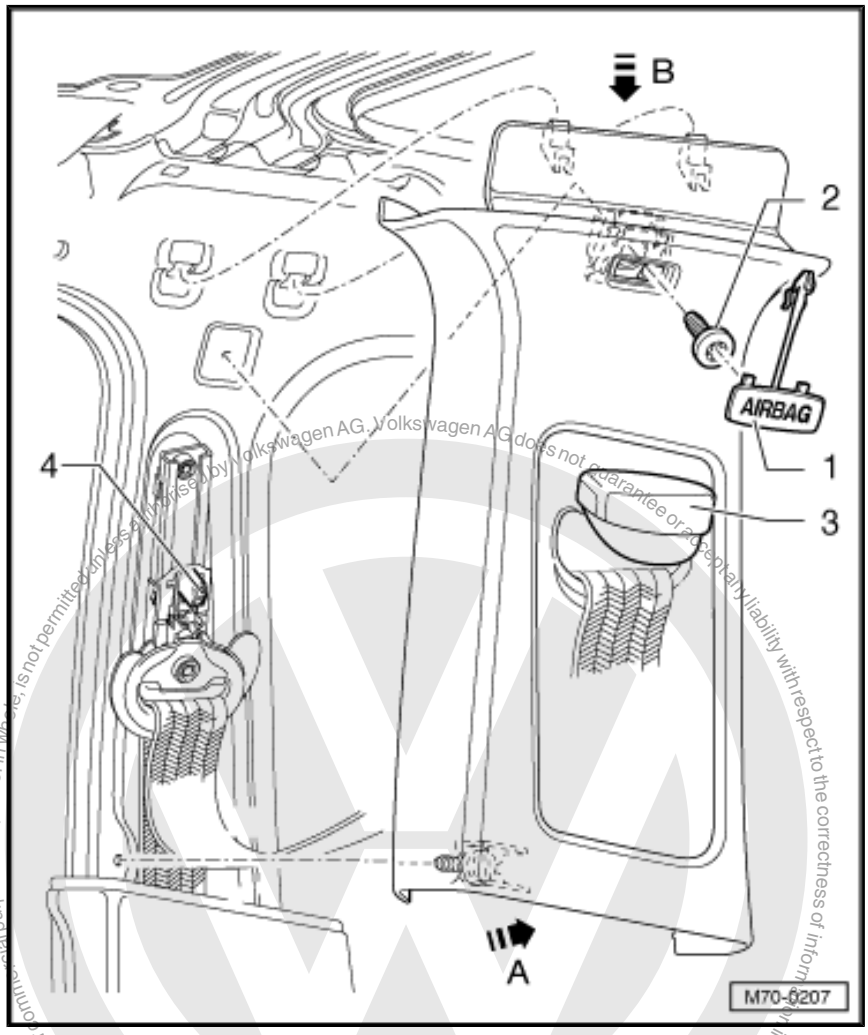

Protected by copyright. Copying for private or commercial purposes, in part or in whole, is not permitted unless authorised by Volkswagen AG. Volkswagen AG does not guarantee or accept any liability with respect to the correctness of information in this document. Copyright by Volkswagen AG.

Downloaded from www.Manualslib.com manuals search engine

3.5.2 Installing

Note

- *When installing, the belt adjuster slide -4- and the button of the trim -3- must be in the same position.*
- *Before installing, check clip for damage and renew if necessary.*

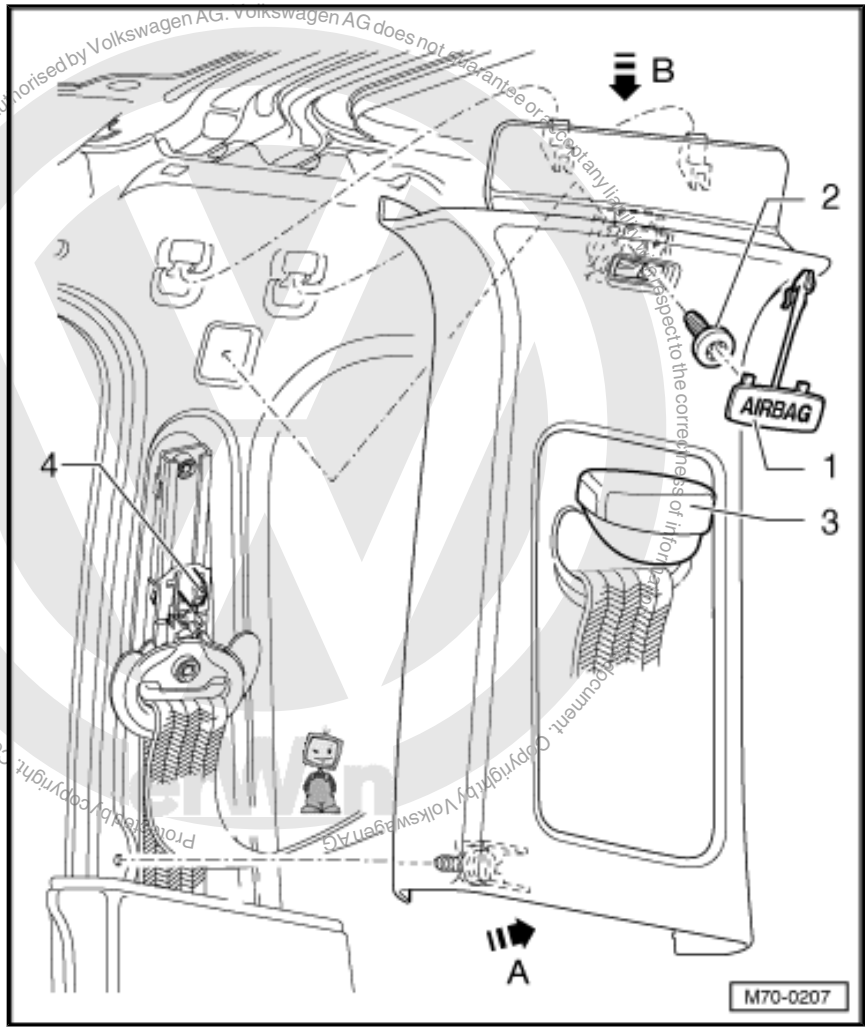

– Install in reverse order of removal.

3.6 Removing and installing lower trim for B-pillar

Note

Removal and installation are described for the left vehicle side.
Follow same instructions for the right side as appropriate.

Downloaded from www.Manualslib.com manuals search engine

3.6.1 Removing

- If vehicle is equipped with an interior monitor, switch off ignition.
- Remove sill panel trim ⇒ page 77 .
- Remove upper trim for B-pillar ⇒ page 213 .
- Remove the two bolts -1- (4 Nm).
- Release trim -3- from door seal beading.
- Pull trim out of mountings in body in area of guide -2-.
- If vehicle is equipped with interior monitoring system, disconnect wiring harness from sensor.

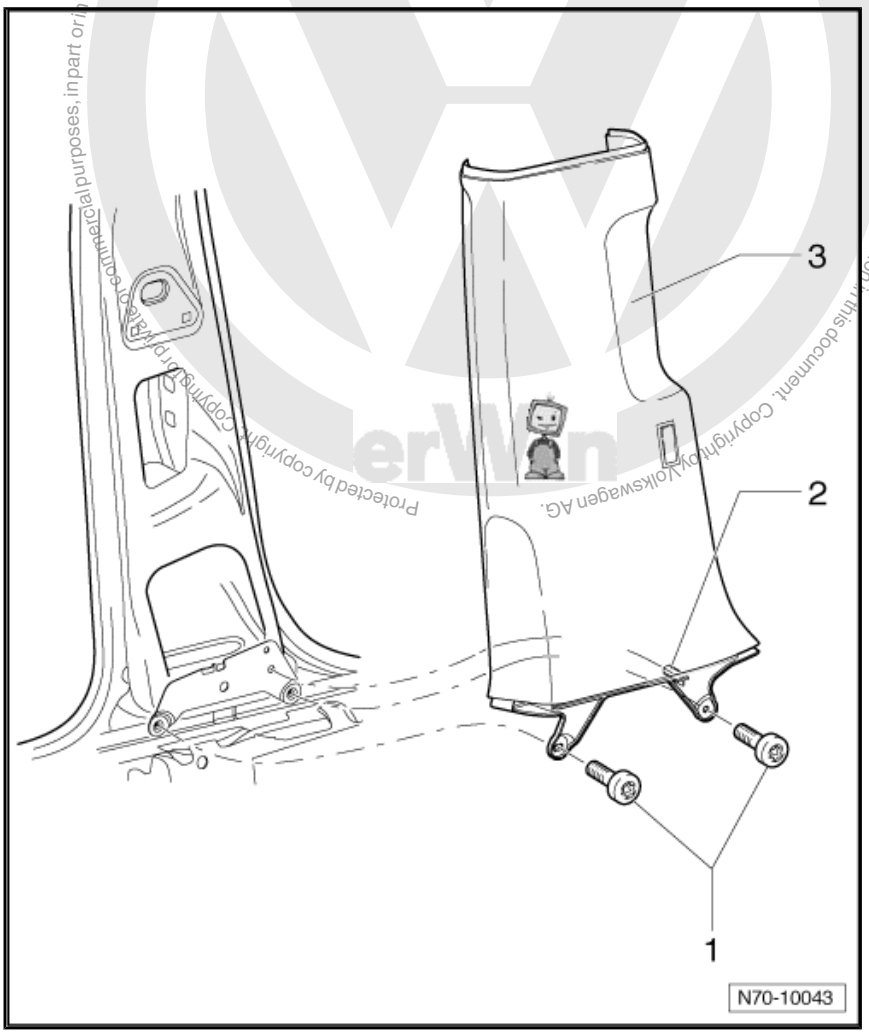

3.6.2 Installing

- Install in reverse order of removal.

Protected by copyright. Copyright by Volkswagen AG. Copyright by Volkswagen AG. Volkswagen AG does not guarantee or accept any liability with respect to the correctness of information in this document. Copying for private or commercial purposes, in part or in whole, is not permitted unless authorised by Volkswagen AG.

Downloaded from www.Manualslib.com manuals search engine

3.7 Removing and installing C-pillar trim (saloon)

Protected by copyright. Copyright for private or commercial purposes, in part or in whole, is not permitted unless authorised by Volkswagen AG. Volkswagen AG does not guarantee or accept any liability with respect to the correctness of information in this document. Copyright by Volkswagen AG.

Note

Removal and installation are described for the left vehicle side. Follow same instructions for the right side as appropriate.

3.7.1 Removing

- Fold backrest forwards.
- Remove airbag emblem -2- and remove bolt -1- (4 Nm).

Note

When reinstalling, airbag emblem -2- must be renewed.

- Release trim from mountings -arrow A- and from door seal beading.
- Pull out trim upwards -arrow B-.

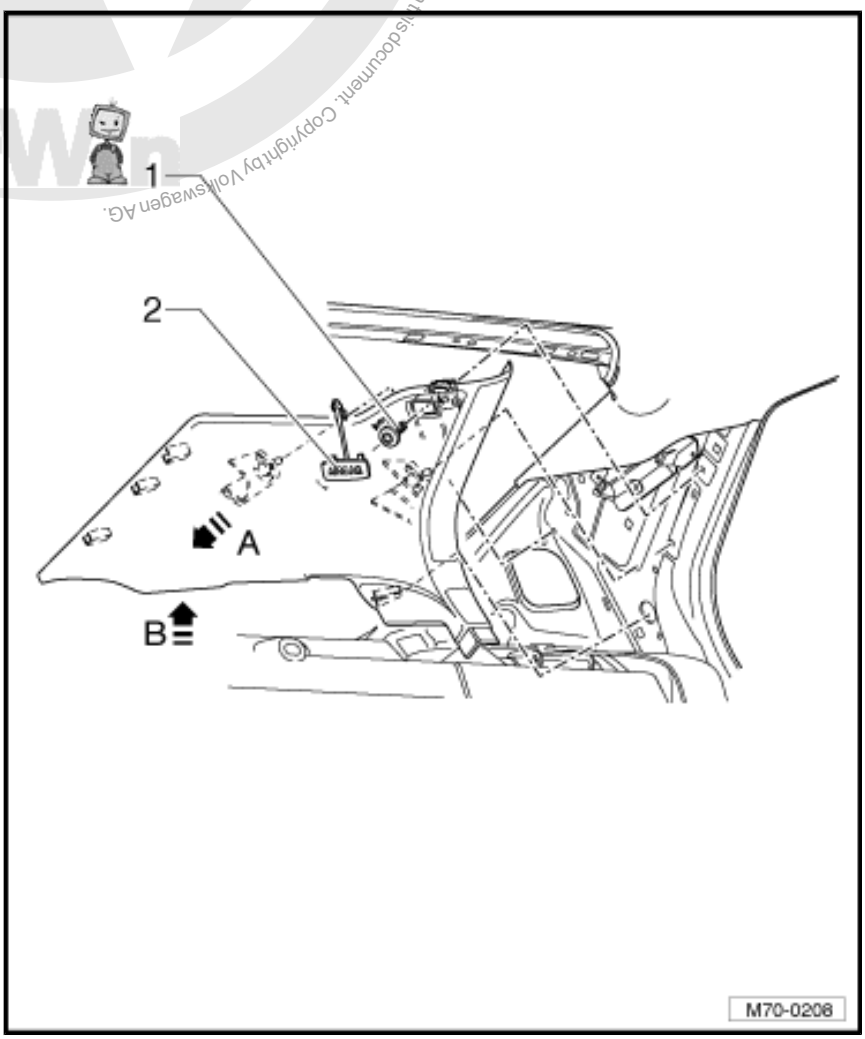

Downloaded from www.Manualslib.com manuals search engine

3.7.2 Installing

– Install in reverse order of removal.

Note

Before installing, check fasteners for damage and renew if necessary.

3.8 Removing and installing C-pillar trim (Variant)

Note

Removal and installation are described for the left vehicle side. Follow same instructions for the right side as appropriate.

3.8.1 Removing

– Fold bench seat and backrest forwards.

– Remove side padding:

♦ With rear side airbags ⇒ page 287

♦ With no rear side airbags ⇒ page 288

– Remove wheel housing liner ⇒ page 79 .

– Remove lock carrier cover ⇒ page 228 .

– Remove luggage compartment side trim ⇒ page 231 .

– Remove airbag emblem -1- and remove bolt -4- (4 Nm).

– Pull trim -3- with clip -2- inwards in direction of -arrow A- and out of mountings in C-pillar and out of both clips -5-.

Protected by copyright. Copying for private or commercial purposes, in part or in whole, is not permitted unless authorised by Volkswagen AG. Volkswagen AG does not guarantee or accept any liability with respect to the correctness of information in this document. Copyright by Volkswagen AG.

Downloaded from www.Manualslib.com manuals search engine

– Pull out trim downwards in direction of -arrow B-.

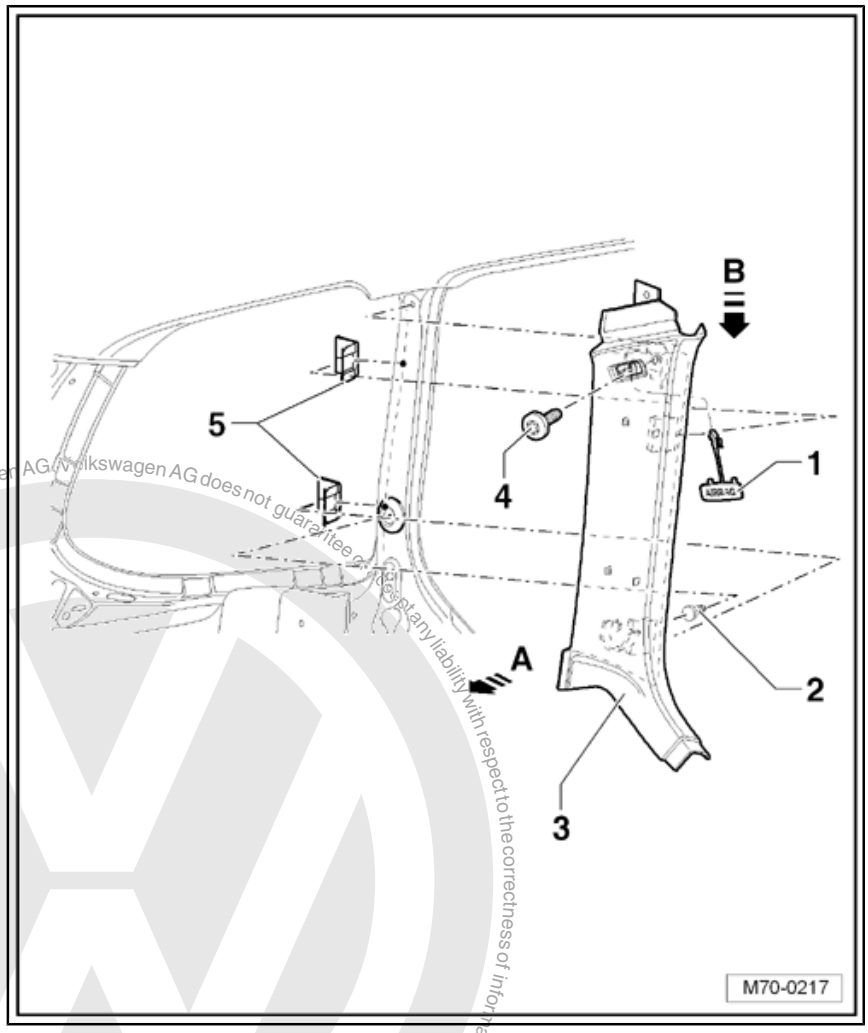

3.8.2 Installing

– Install in reverse order of removal.

Note

Before installing, check fasteners for damage and renew if necessary.

3.9 Removing and installing D-pillar trim

Note

Removal and installation are described for the left vehicle side. Follow same instructions for the right side as appropriate.

Volkswagen AG does not guarantee or accept any liability with respect to the correctness of information in this document. Copyright by Volkswagen AG. Reproduction by copyright. Copying for private or commercial purposes, in part or in whole, is not permitted unless authorised by Volkswagen AG.

Downloaded from www.Manualslib.com manuals search engine

3.9.1 Removing

Vehicles with rear side airbag:

– Disconnect vehicle battery ⇒ Rep. Gr. 27 .

All vehicles:

– Fold bench seat and backrest forwards.

– Remove side padding:

♦ With rear side airbags ⇒ page 287

♦ With no rear side airbags ⇒ page 288

– Remove roof end strip ⇒ page 240

– Remove lock carrier cover ⇒ page 228 .

– Remove luggage compartment side trim ⇒ page 231 .

– Pull trim -1- with clips -2- in direction of -arrow- and out of mountings in D-pillar -3-.

Note

For greater clarity, clips -2- are shown removed.

Protected by copyright. Copying for private or commercial purposes, in part or in whole, is not permitted unless authorised by Volkswagen AG. Volkswagen AG does not guarantee or accept any liability with respect to the correctness of information in this document. Copyright by Volkswagen AG.

Downloaded from www.Manualslib.com manuals search engine

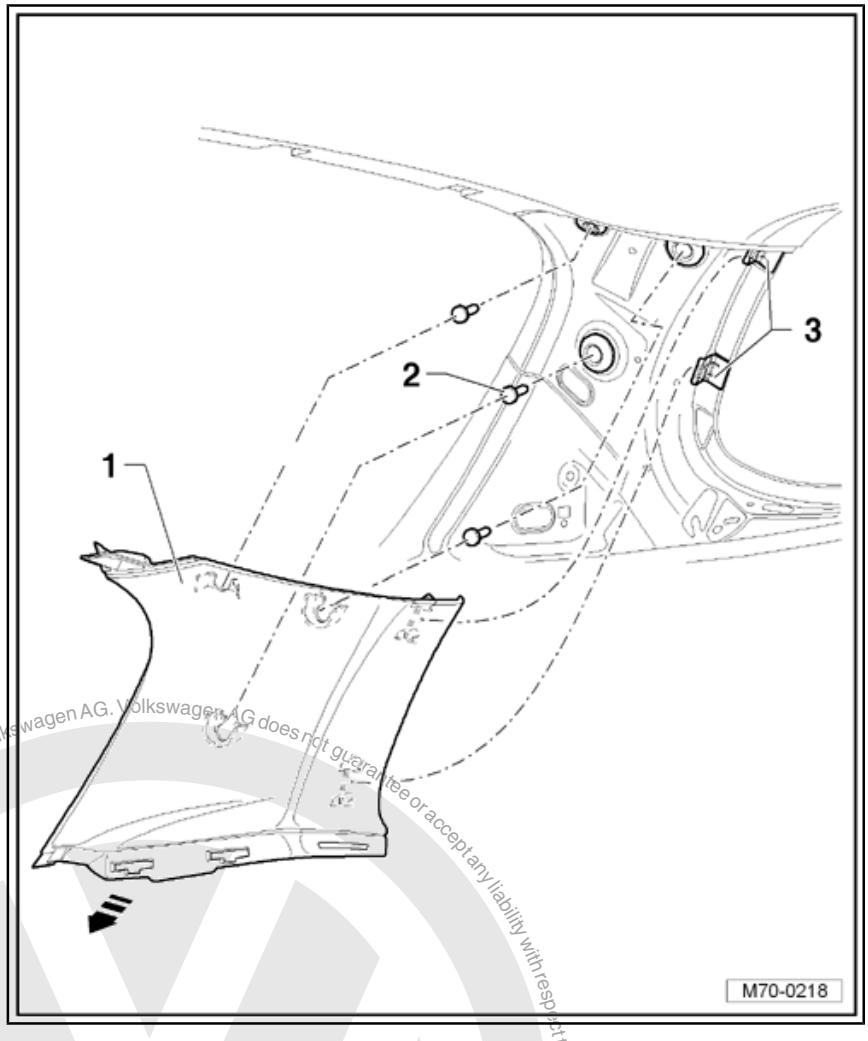

3.9.2 Installing

– Install in reverse order of removal.

Note

Before installing, check fasteners for damage and renew if necessary.

3.10 Removing and installing rear shelf

3.10.1 Removing

– Remove bench seat ⇒ page 284 .
– Remove side padding on left and right:
♦ With rear side airbags ⇒ page 287
♦ With no rear side airbags ⇒ page 288
– Remove C-pillar trim on left and right ⇒ page 217 .
– Remove left and right seat belt trim from rear shelf.

Protected by copyright. Copyright by Volkswagen AG. Copying for private or commercial purposes, in part or in whole, is not permitted unless authorised by Volkswagen AG. Volkswagen AG does not guarantee or accept any liability with respect to the correctness of information in this document.

Downloaded from www.Manualslib.com manuals search engine

– Remove rear outer seat belt anchors on left and right sides ⇒ page 96 .
– If fitted, remove child seat anchorages -2- ⇒ page 108 .
– Unclip retaining clip -3-, lift front of rear shelf -1- upwards -arrow A- for this.
– Pull rear shelf -1- forwards -arrow B- until guide pins -4- are released from guides in body.
– Guide seat belt trim, belt buckle and belt end anchor out of rear shelf on left and right sides and remove rear shelf from vehicle.

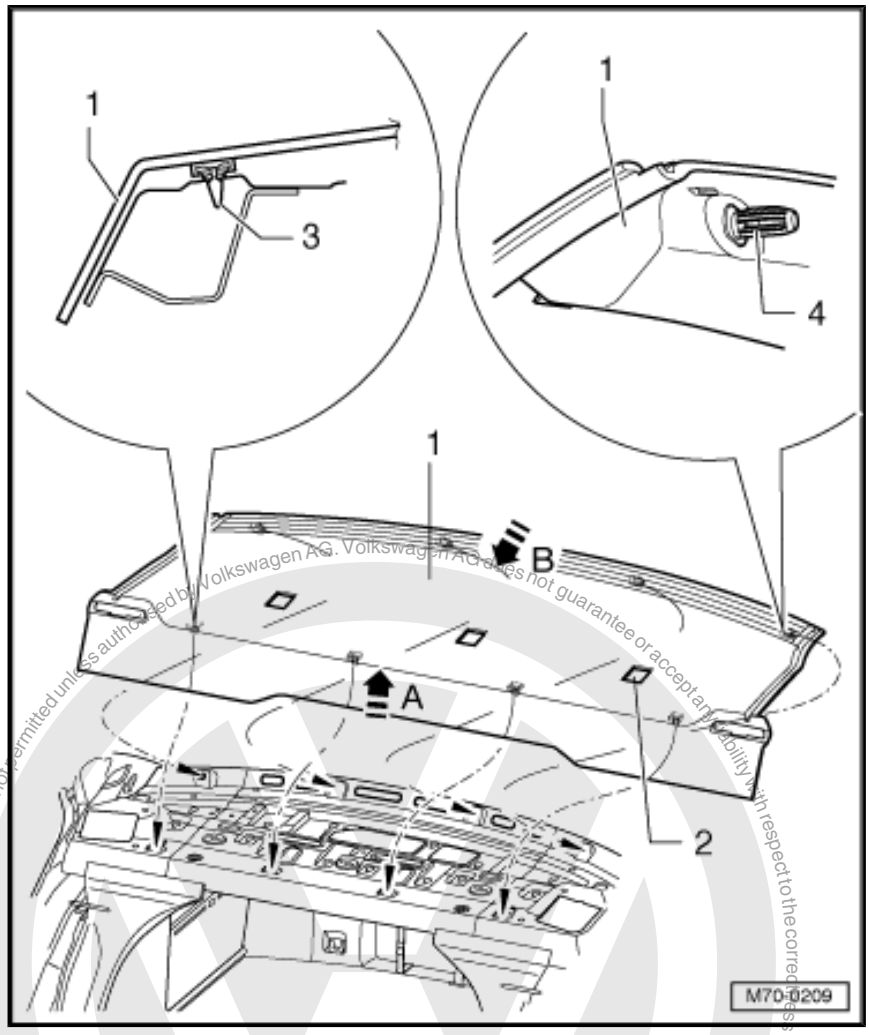

3.10.2 Installing

– Install in reverse order of removal.

Note

Before installing, check fasteners for damage and renew if necessary.

Protected by copyright. Copying for private or commercial purposes, in part or in whole, is not permitted unless authorised by Volkswagen AG. Volkswagen AG does not guarantee or accept any liability with respect to the correctness of information in this document. Copyright by Volkswagen AG.

Downloaded from www.Manualslib.com manuals search engine

4 Luggage compartment trims

4.1 Tools

4.1.1 Required special tools, workshop equipment, test and measuring devices and auxiliary items

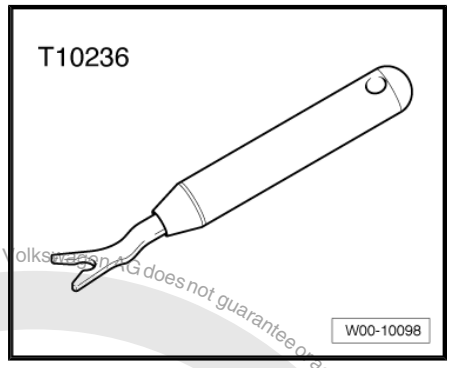

- Release tool -T10236-
- Torque wrench -V.A.G 1783-

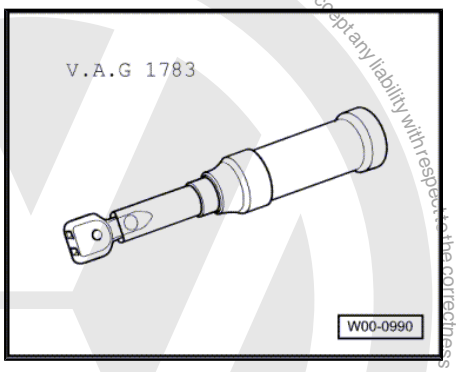

4.2 Removing and installing floor covering from vehicle with flat luggage compartment (Variant)

4.2.1 Removing

– Fold luggage compartment floor covering -1- upwards and remove the four bolts -2- (2 Nm).

Protected by copyright. Copying for private or commercial purposes, in part or in whole, is not permitted unless authorised by Volkswagen AG. Volkswagen AG does not guarantee or accept any liability with respect to the correctness of information in this document. Copyright by Volkswagen AG.

Downloaded from www.Manualslib.com manuals search engine

– Pull luggage compartment floor covering -1- out of luggage compartment trim -3- in direction of -arrow-.

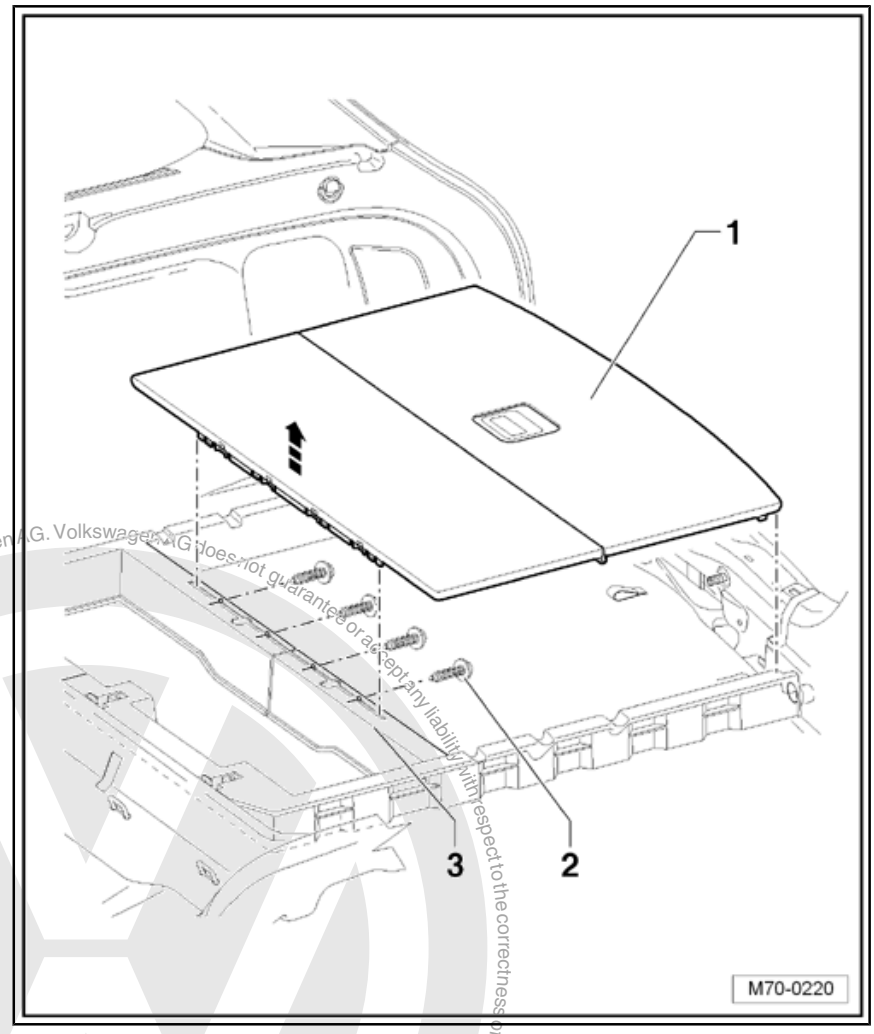

Protected by copyright. Copying for private or commercial purposes, in part or in whole, is not permitted unless authorised by Volkswagen AG. Volkswagen AG does not guarantee or accept any liability with respect to the correctness of information in this document. Copyright by Volkswagen AG.

4.2.2 Installing

– Install in reverse order of removal.

4.3 Removing and installing storage compartment cover in vehicle with flat floor (Variant)

4.3.1 Removing

– Fold storage compartment cover -1- up and unscrew bolt -4- (2 Nm) for support -3-.

– Fold covers -5- upwards.

– Remove the three bolts -2- from storage compartment cover -1- (2 Nm).

Downloaded from www.Manualslib.com manuals search engine

– Remove storage compartment cover -1- from vehicle.

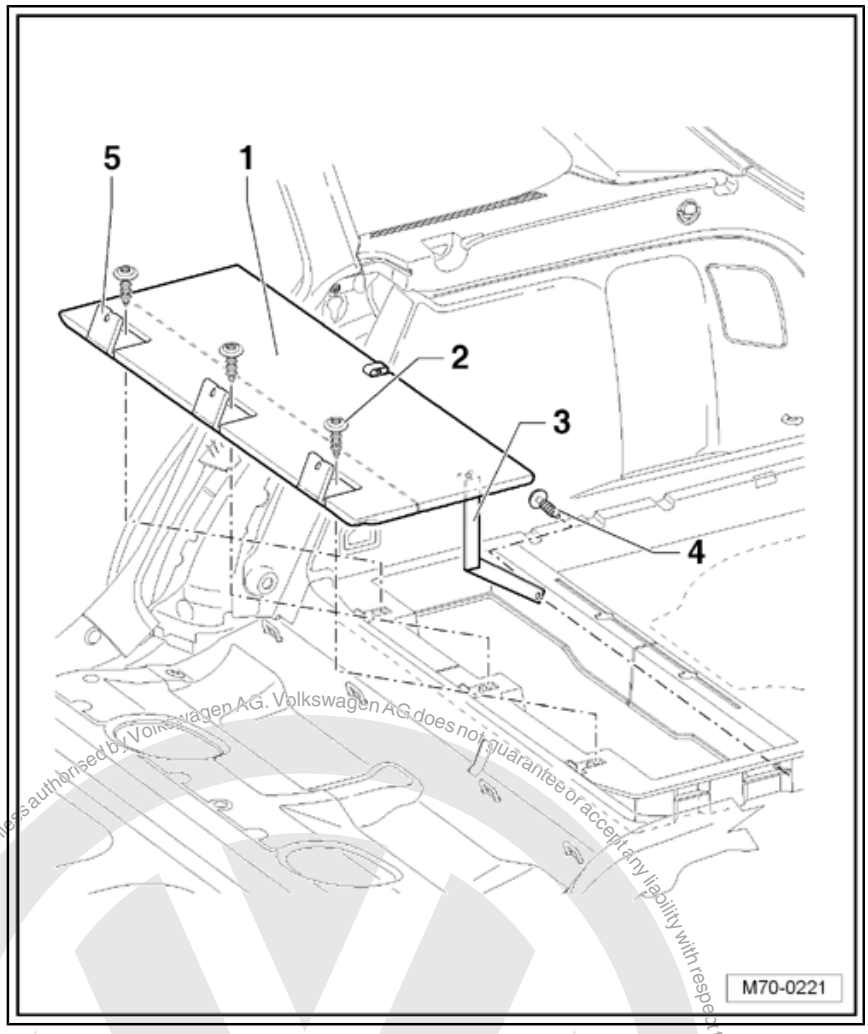

4.3.2 Installing

– Install in reverse order of removal.

4.4 Removing and installing luggage compartment trim in vehicle with flat floor (Variant)

4.4.1 Removing

– Remove luggage compartment floor covering ⇒ page 223 .
– Remove storage compartment cover ⇒ page 224 .
– Remove lining cover -1- from vehicle.
– Remove the two plastic nuts -5-.
– Remove the two bolts -4- from their nuts -3- (2 Nm).

Protected by copyright. Copyright by Volkswagen AG. Volkswagen AG does not guarantee or accept any liability with respect to the correctness of information in this document. Copying for private or commercial purposes, in part or in whole, is not permitted unless authorised by Volkswagen AG.

Downloaded from www.Manualslib.com manuals search engine

– Lift luggage floor lining -2- in direction of -arrow A-, then pull it in direction of -arrow B- and out of side parts on left and right.

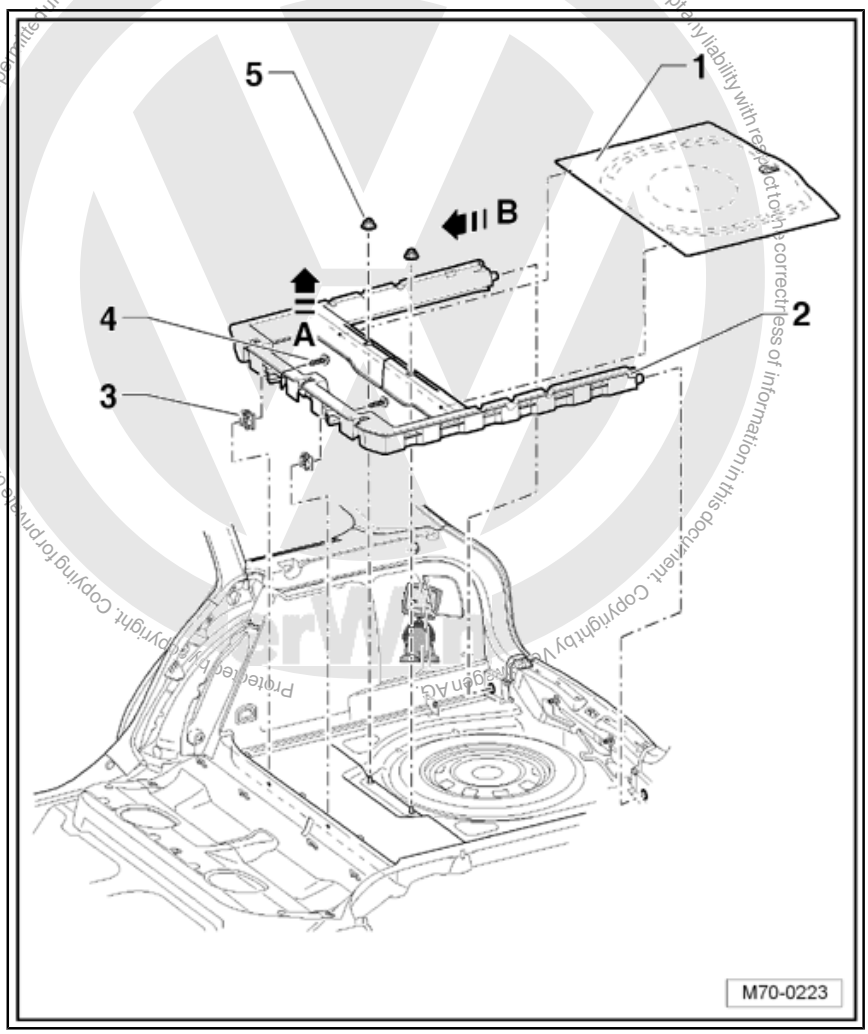

4.4.2 Installing

– Install in reverse order of removal.

4.5 Removing and installing felt covering in vehicle with flat floor (Variant)

4.5.1 Removing

Vehicles with flat luggage compartment floor:

– Remove luggage compartment floor lining trim ⇒ page 225 .

All vehicles:

– Remove side padding:

♦ With rear side airbags ⇒ page 287

♦ With no rear side airbags ⇒ page 288

– Remove luggage compartment side trim ⇒ page 231 .

Downloaded from www.Manualslib.com manuals search engine

– Pull out the three plugs -1-.
– Carefully release felt covering -2- from adhesive strips -3- on body floor.
– Take felt covering out of vehicle.

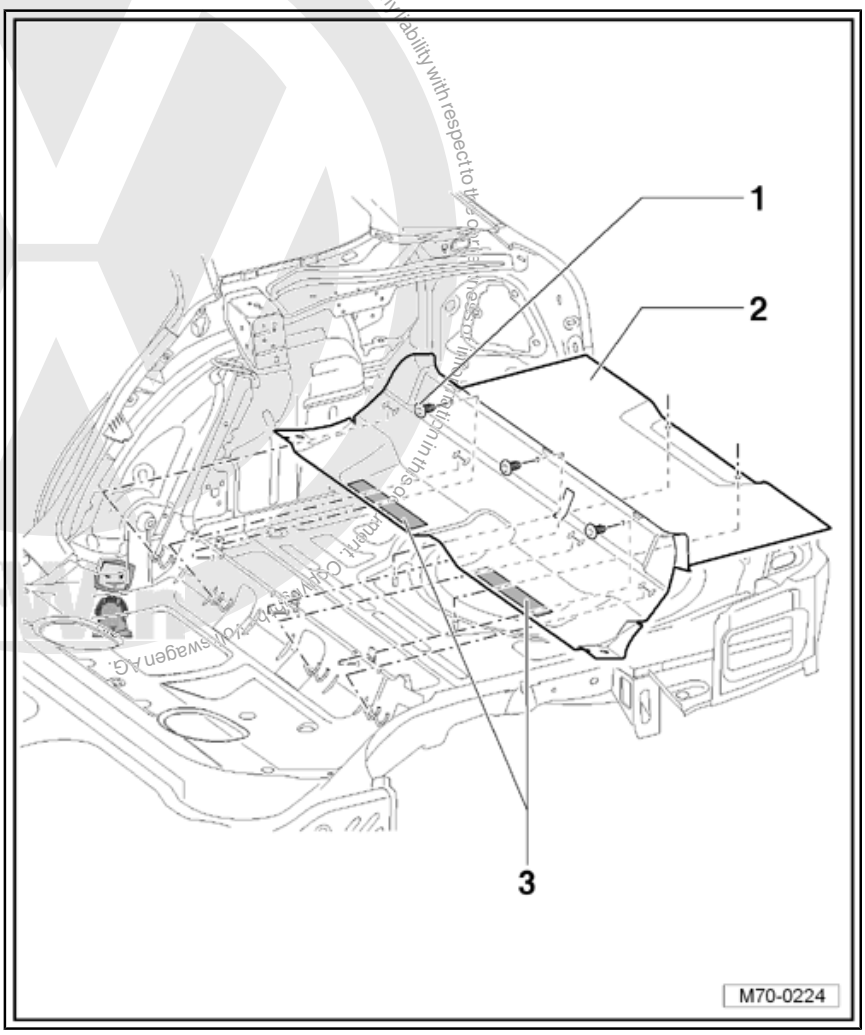

4.5.2 Installing

– Install in reverse order of removal.

4.6 Removing and installing rear lock carrier cover (saloon)

4.6.1 Removing

– Remove floor covering from luggage compartment.
– Unscrew securing clips -1- from studs on body.
– Separate lower section of cover -arrow A- from body.

Downloaded from www.Manualslib.com manuals search engine

– Pull cover upwards off lock carrier -arrows B-.

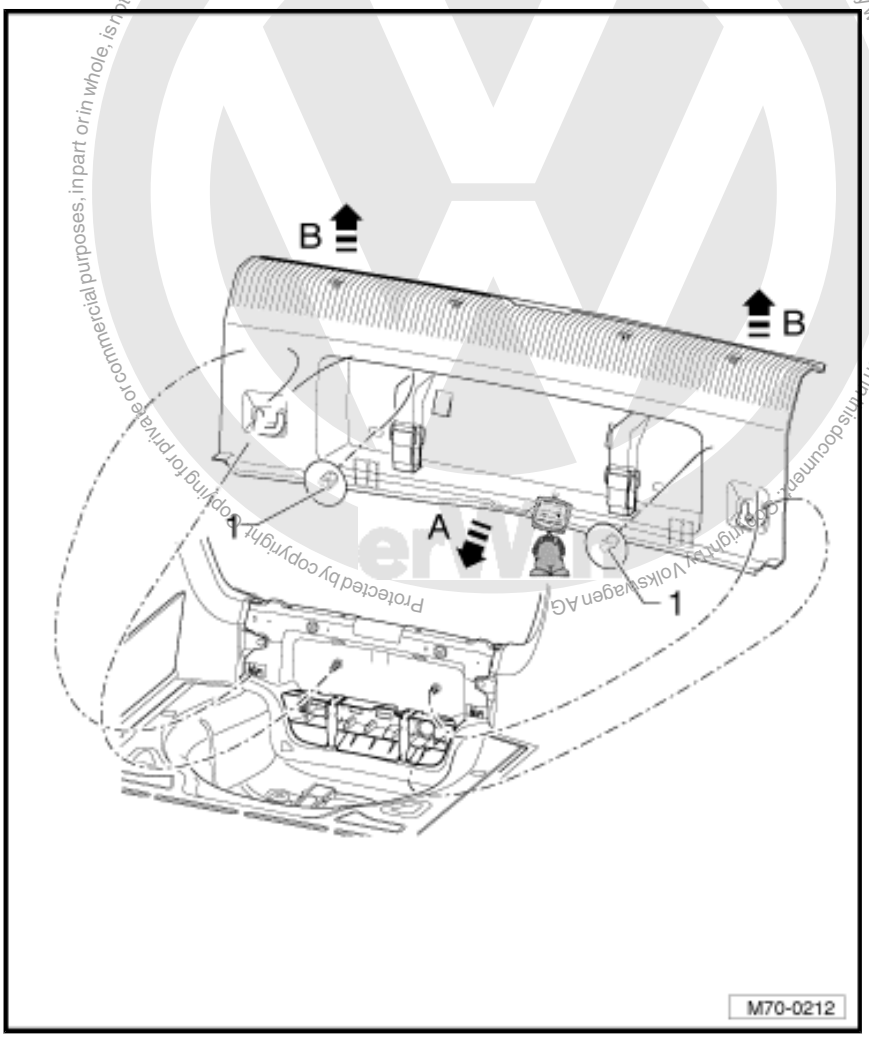

4.6.2 Installing

– Install in reverse order of removal.

Note

Before installing, check fasteners for damage and renew if necessary.

4.7 Removing and installing rear lock carrier cover (Variant)

4.7.1 Removing

Vehicles with lower luggage compartment floor:

– Remove luggage compartment floor covering from vehicle.

Downloaded from www.Manualslib.com manuals search engine

Volkswagen AG. Volkswagen AG does not guarantee or accept any liability with respect to the correctness of information in this document. Copyright by Volkswagen AG. Protected by copyright. Copying for private or commercial purposes, in part or in whole, is not permitted unless authorised by Volkswagen AG.

Vehicles with flat luggage compartment floor:

– Fold luggage compartment floor covering forwards.

– Remove storage compartment lining from vehicle.

All vehicles:

– Unscrew securing clips -1- from studs on body.

– Release cover -2- in lower area from studs -3- on body, in direction of -arrow A-.

– Pull cover -2- upwards off lock carrier in direction of -arrow B-.

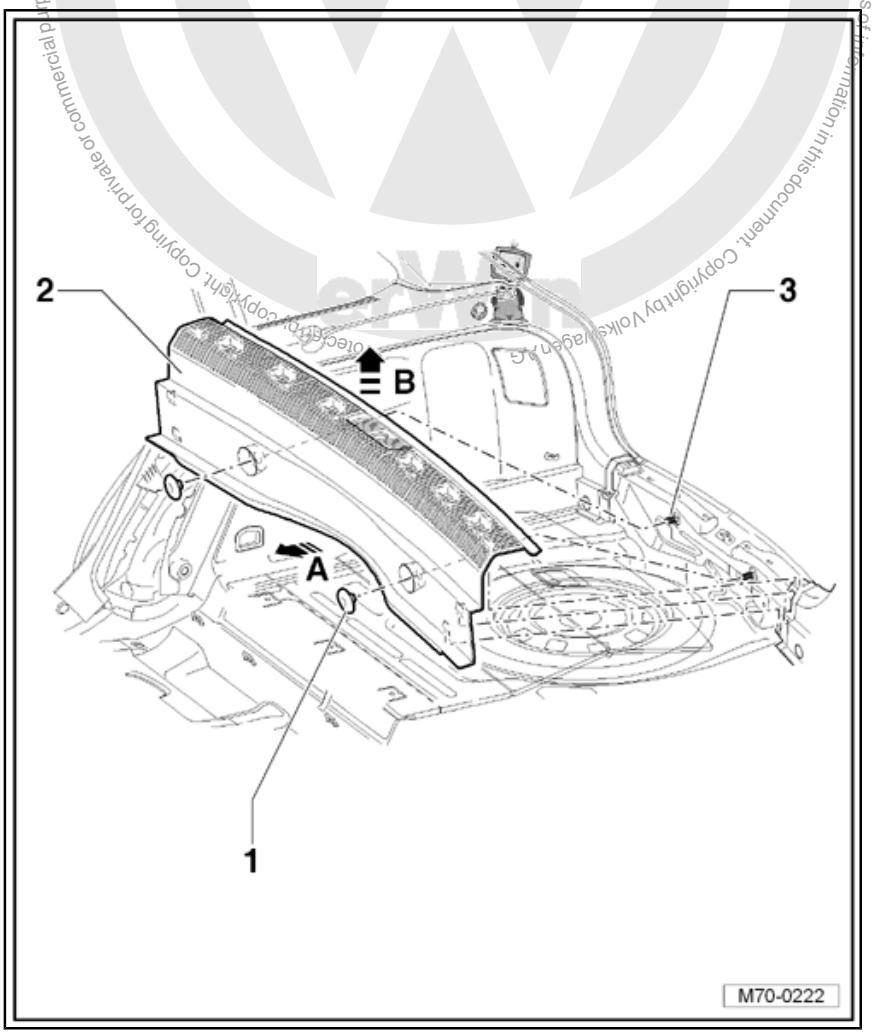

4.7.2 Installing

– Install in reverse order of removal.

Note

Before installing, check fasteners for damage and renew if necessary.

Downloaded from www.Manualslib.com manuals search engine

4.8 Removing and installing luggage compartment side trim (saloon)

Note

Removal and installation is described for right side of vehicle.
Follow same instructions for left side as appropriate.

4.8.1 Removing

- Switch off ignition.
- Remove floor covering from luggage compartment.
- Remove bench seat ⇒ page 284 .
- Remove side padding on left and right:
- ♦ With rear side airbags ⇒ page 287
- ♦ With no rear side airbags ⇒ page 288
- Remove rear lock carrier cover.
- Remove the two bolts -1- (8 Nm) and remove lashing eye -2-.
- Remove securing clip -3-.
- Depending on level of equipment in vehicle, disconnect respective wiring harnesses and remove trim from vehicle.

Protected by copyright. Copying for private or commercial purposes, in part or in whole, is not permitted unless authorised by Volkswagen AG. Volkswagen AG does not guarantee or accept any liability with respect to the correctness of information in this document. Copyright by Volkswagen AG.

Downloaded from www.Manualslib.com manuals search engine

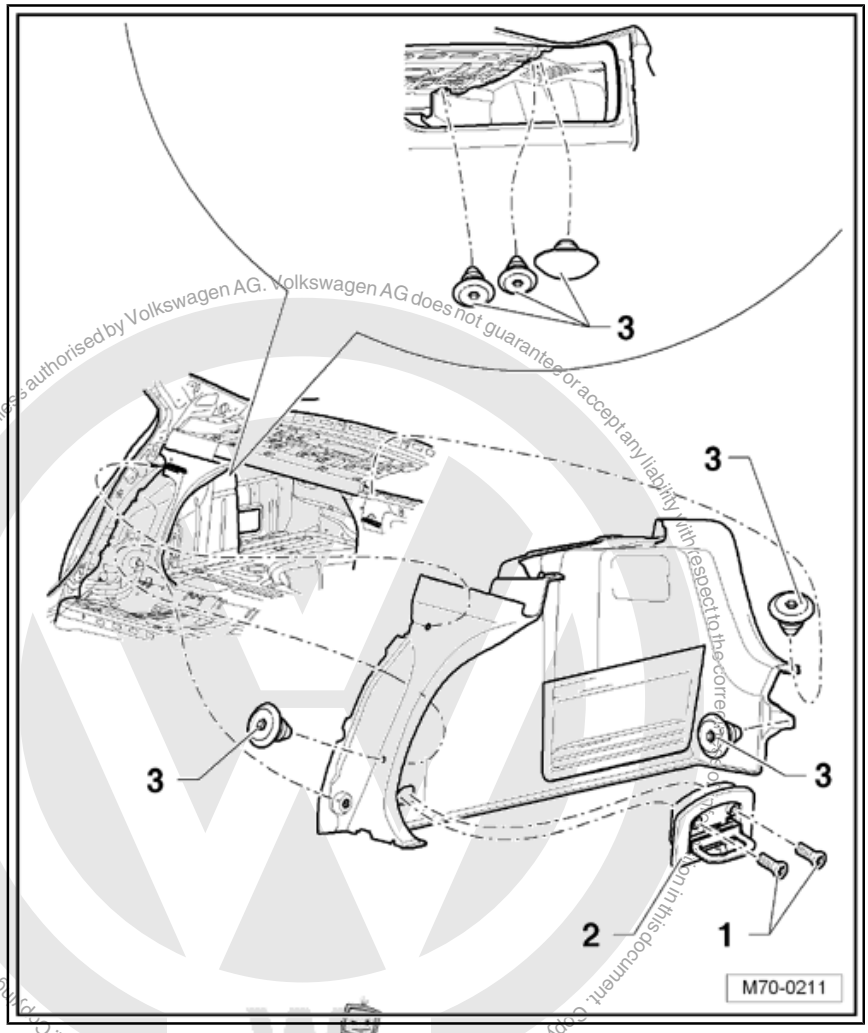

Protected by copyright. Copying for private or commercial purposes, in part or in whole, is not permitted unless authorised by Volkswagen AG. Volkswagen AG does not guarantee or accept any liability with respect to the correctness of information in this document. Copyright by Volkswagen AG.

4.8.2 Installing

– Install in reverse order of removal.

4.9 Removing and installing luggage compartment side trim (Variant)

Note

Removal and installation is described for right side of vehicle.
Follow same instructions for left side as appropriate.

4.9.1 Removing

– Remove rear lock carrier cover ⇒ page 228 .

Vehicles with flat luggage compartment floor:

– Remove luggage compartment floor lining trim ⇒ page 225 .

All vehicles:

– Remove seat backrest ⇒ page 285 .

– Remove side padding:

Downloaded from www.Manualslib.com manuals search engine

- ♦ With rear side airbags ⇒ page 287
- ♦ With no rear side airbags ⇒ page 288
- – Remove the two bolts -1- (8 Nm) and remove lashing eye -2-.
- – Remove securing clip -3-.
- – Unbolt bolt -8- (4.5 Nm) and remove bag hook bracket -7-.
- – Pull trim -6- inwards, -arrow A- and out of mountings in body.
- – Pull trim -6- forwards -arrow B- over backrest locking eye -4- and lashing eye -5-.
- – Depending on level of equipment in vehicle, disconnect respective wiring harnesses and remove trim from vehicle.

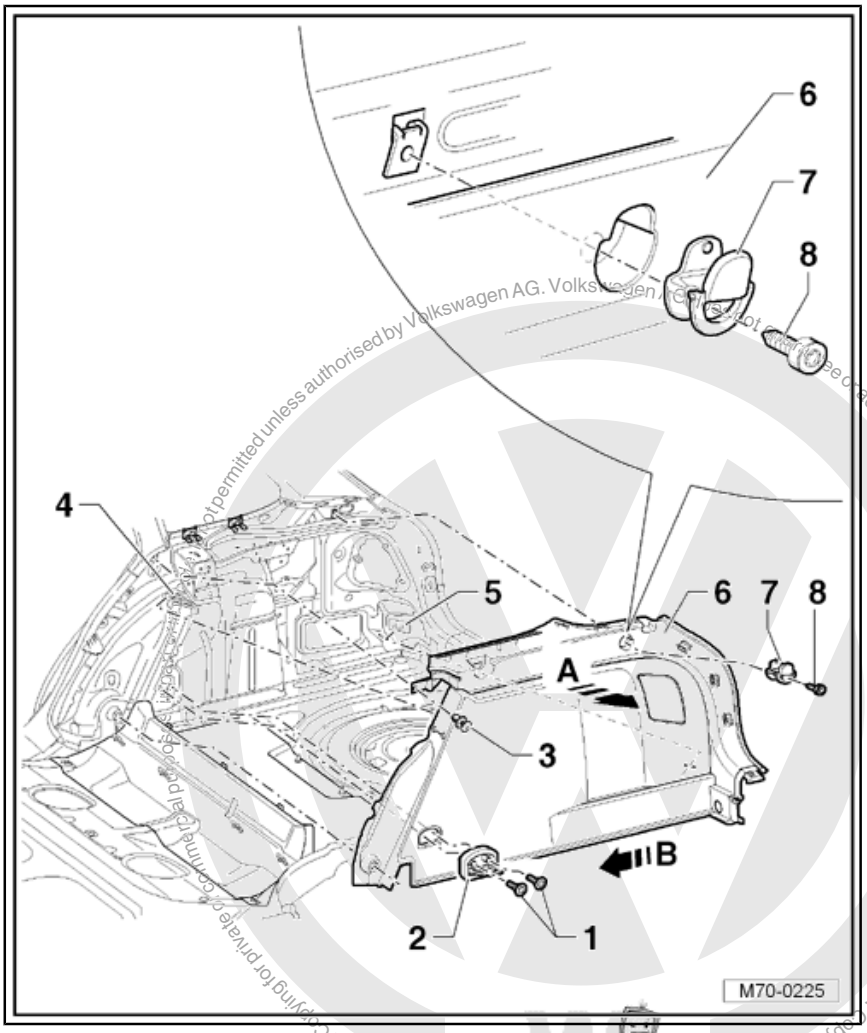

4.9.2 Installing

- – Install in reverse order of removal.

Downloaded from www.Manualslib.com manuals search engine

Note

Before installing, check fasteners for damage and renew if necessary.

Protected by copyright. Copyright for private or commercial purposes, in part or in whole, is not permitted unless authorised by Volkswagen AG. Volkswagen AG does not guarantee or accept any liability with respect to the correctness of information in this document. Copyright by Volkswagen AG.

Downloaded from www.Manualslib.com manuals search engine

5 Rear lid trim

5.1 Tools

Special tools and workshop equipment required

- Removal pliers -3392-

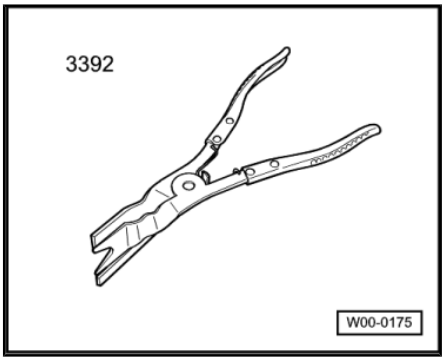

- Torque wrench -V.A.G 1783-

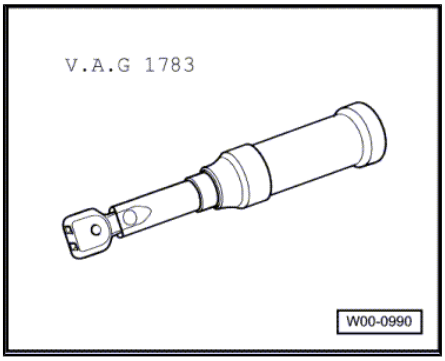

5.2 Removing and installing lower trim for rear lid (saloon)

5.2.1 Removing

– Remove lock cover.

– Remove cover from handle for interior emergency release -2-.

– Remove bolts -1- from handle recess (2 Nm).

– Release trim from mountings in rear lid using removal wedge -3392- .

Protected by copyright. Copying for private or commercial purposes, in part or in whole, is not permitted unless authorised by Volkswagen AG. Volkswagen AG does not guarantee or accept any liability with respect to the correctness of information in this document. Copyright by Volkswagen AG.

Downloaded from www.Manualslib.com manuals search engine

– Unhook Bowden cable at handle for interior emergency release and remove trim from rear lid.

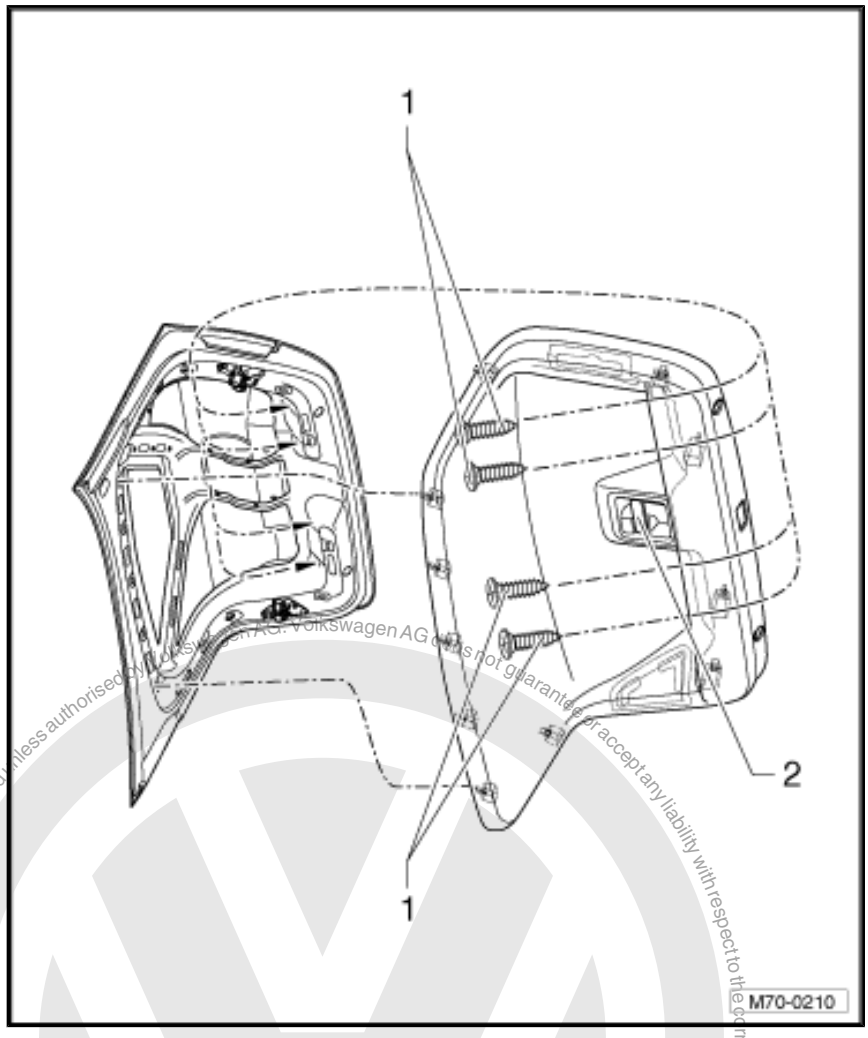

5.2.2 Installing

– Install in reverse order of removal.

Note

Before installing, check fasteners for damage and renew if necessary.

5.3 Removing and installing lower trim for rear lid (Variant)

5.3.1 Removing

– Unclip the two covers -1- from trim -3-.

– Remove the two bolts -2- (2 Nm).

Protected by copyright. Copying for private or commercial purposes, in part or in whole, is not permitted unless authorised by Volkswagen AG. Volkswagen AG does not guarantee or accept any liability with respect to the correctness of information in this document. Copyright by Volkswagen AG.

Downloaded from www.Manualslib.com manuals search engine

– Release upper part of trim -3- from fasteners in window frame trim -4-.

– Pull off trim.

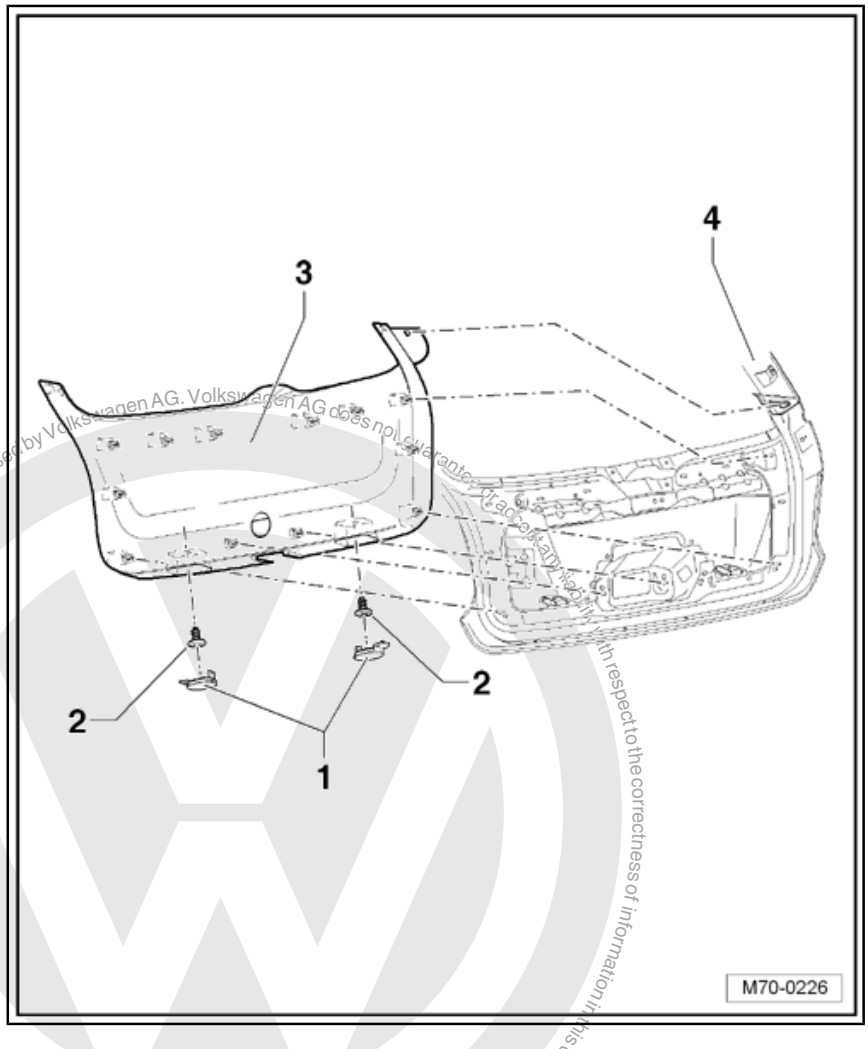

5.3.2 Installing

– Install in reverse order of removal.

Note

Before installing, check fasteners for damage and renew if necessary.

5.4 Removing and installing window frame trim (Variant)

5.4.1 Removing

– Remove rear lid trim ⇒ page 235 .

Protected by copyright. Copyright for private or commercial purposes, in part or in whole, is not permitted unless authorised by Volkswagen AG. Volkswagen AG does not guarantee or accept any liability with respect to the correctness of information in this document. Copyright by Volkswagen AG.

Downloaded from www.Manualslib.com manuals search engine

– Release trim -1- along sides from mountings in rear lid -2- using removal pliers -3392- .
– Pull upper edge of trim out of mountings.

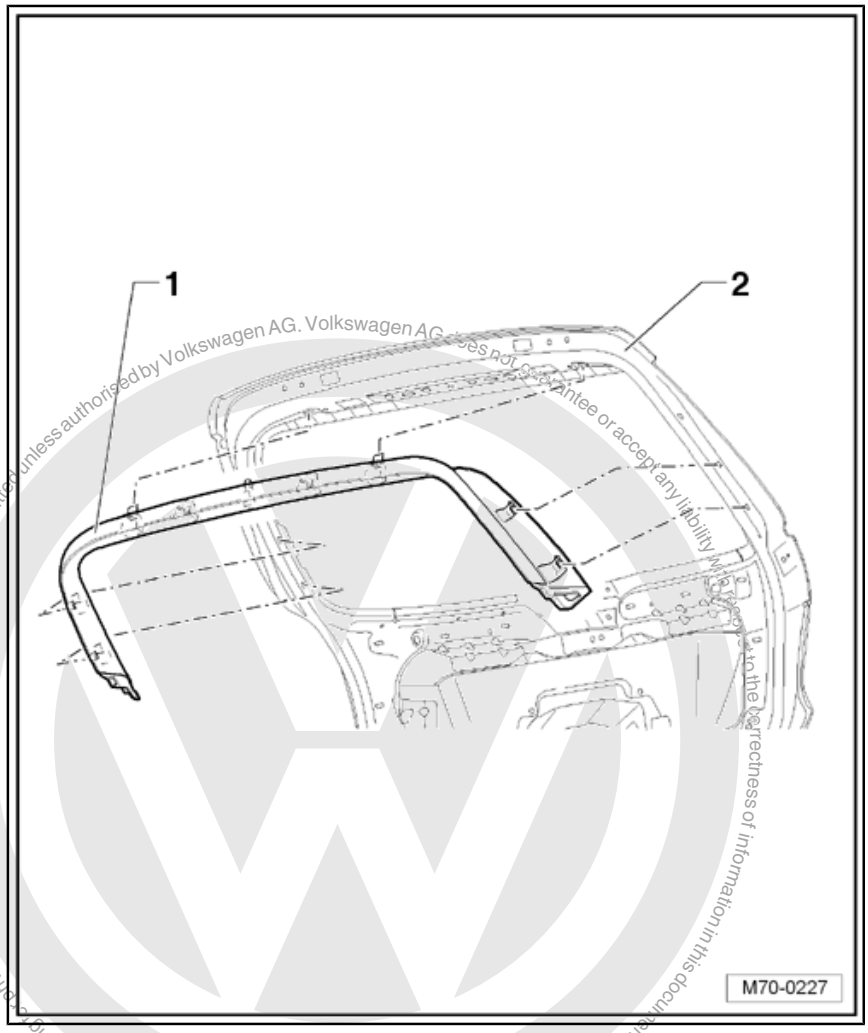

Protected by copyright. Copying for private or commercial purposes, in part or in whole, is not permitted unless authorised by Volkswagen AG. Volkswagen AG does not guarantee or accept any liability with respect to the correctness of information in this document. Copyright by Volkswagen AG.

5.4.2 Installing

– Install in reverse order of removal.

Note

Before installing, check fasteners for damage and renew if necessary.

Downloaded from www.Manualslib.com manuals search engine

6 Roof trims

6.1 Tools

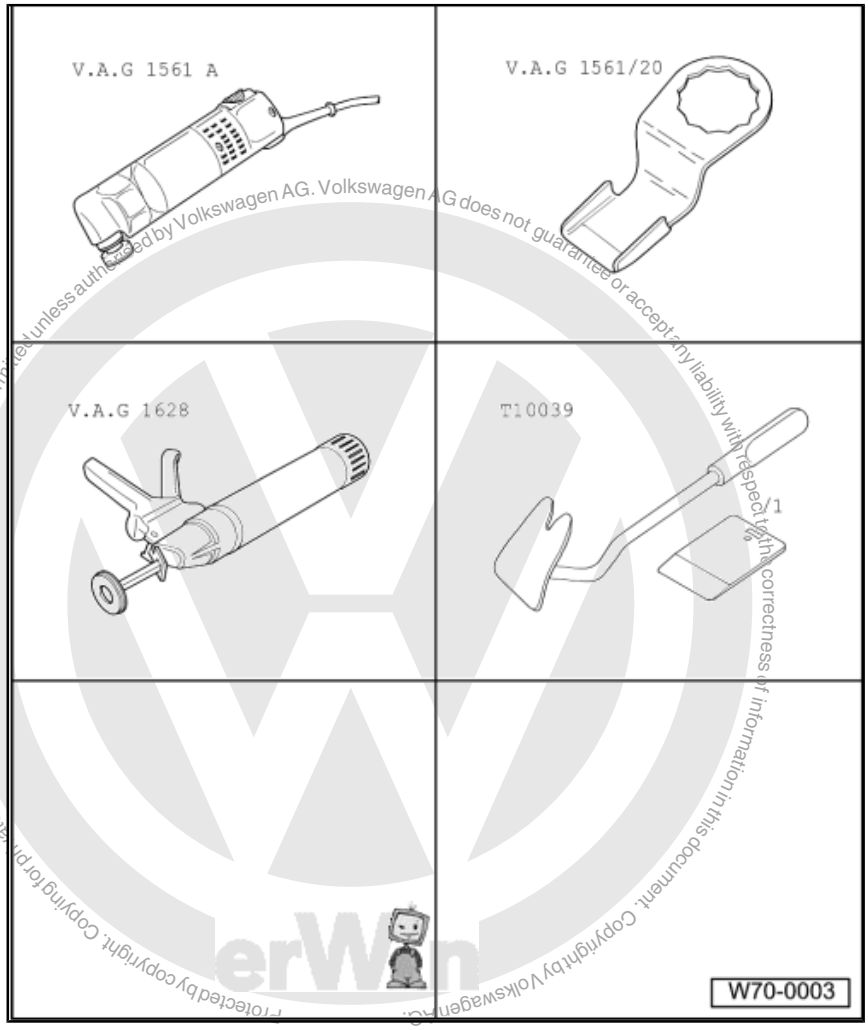

- Electric cutter -V.A.G 1561 A-
- Cutting blade -V.A.G 1561/20-
- Hand-cartridge gun -V.A.G 1628-
- Release lever -T10039 -
- Removal wedge -T10039 /1-

6.2 Removing and installing roof end strip (saloon)

6.2.1 Removing

– Pull roof end strip -1- downwards out of mountings using removal wedge -3409- .

Downloaded from www.Manualslib.com manuals search engine

Note

Before installing, check fasteners for damage and renew if necessary.

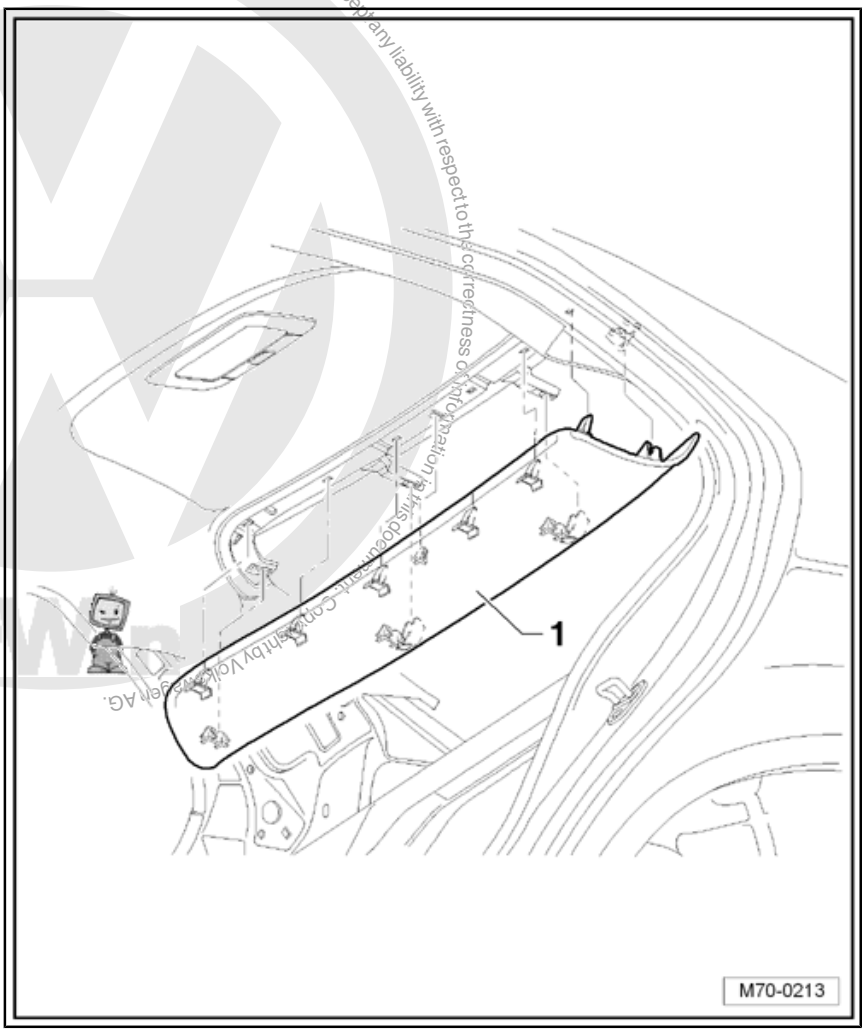

6.2.2 Installing

– Install in reverse order of removal.

Protected by copyright. Copying for private or commercial purposes, in part or in whole, is not permitted unless authorised by Volkswagen AG. Volkswagen AG does not guarantee or accept any liability with respect to the correctness of information in this document. Copyright by Volkswagen AG.

Downloaded from www.Manualslib.com manuals search engine

6.3 Removing and installing roof end strip (Variant)

6.3.1 Removing

– Pull roof end strip -2- with clips -1- downwards out of mountings and out of bead of rear lid seal.

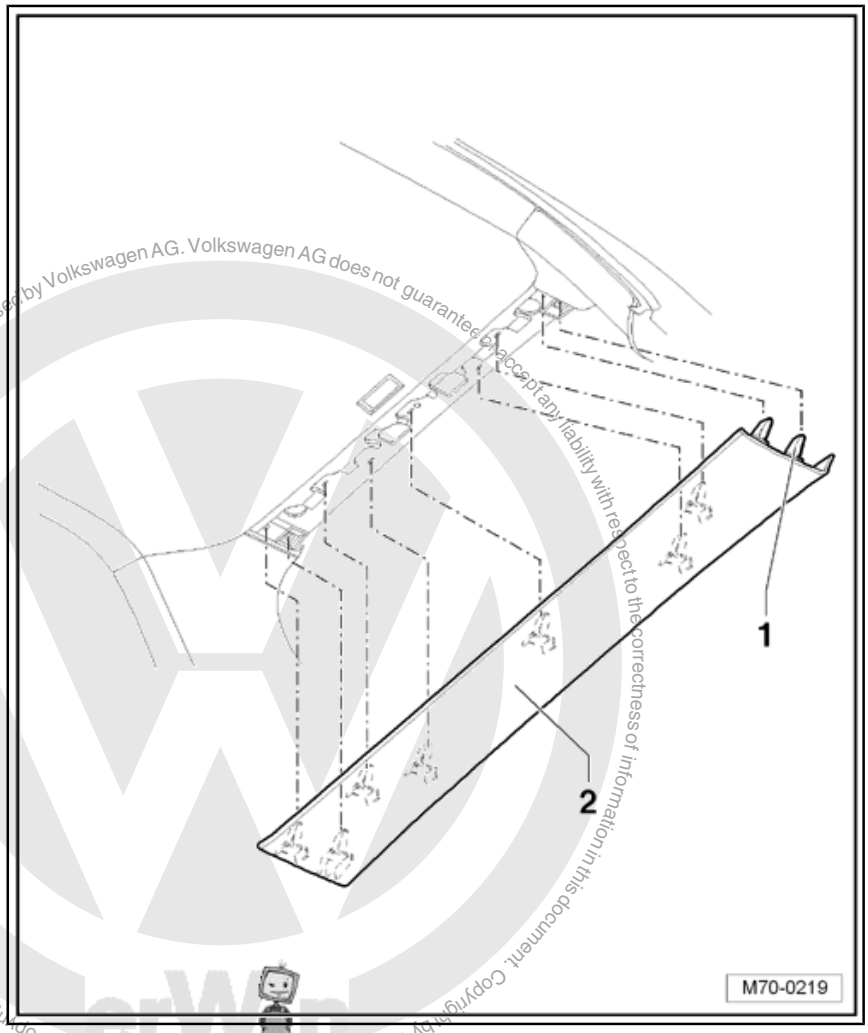

Protected by copyright. Copying for private or commercial purposes, in part or in whole, is not permitted unless authorised by Volkswagen AG. Volkswagen AG does not guarantee or accept any liability with respect to the correctness of information in this document. Copyright by Volkswagen AG.

6.3.2 Installing

– Install in reverse order of removal.

Note

Before installing, check fasteners for damage and renew if necessary.

Downloaded from www.Manualslib.com manuals search engine

6.4 Removing and installing moulded head-liner (saloon)

6.4.1 Removing

– Open sliding/tilting sunroof, if fitted.

– Switch off ignition.

– Remove centre console:

Jetta 2005 ▸, Golf Variant 2007 ▸

- Removing and installing basic version centre console (Jetta 2005 ▸, Golf Variant 2007 ▸) ⇒ page 7 .
- Removing and installing Highline centre console (Jetta 2005 ▸, Golf Variant 2007 ▸) ⇒ page 16 .

Jetta 2010 ▸, Golf Variant 2010 ▸

- Removing and installing basic version centre console (Jetta 2010 ▸, Golf Variant 2010 ▸) ⇒ page 11 .
- Removing and installing Highline centre console (Jetta 2010 ▸, Golf Variant 2010 ▸) ⇒ page 25 .

Protected by copyright. Copying for private or commercial purposes, in part or in whole, is not permitted unless authorised by Volkswagen AG. Volkswagen AG does not guarantee or accept any liability with respect to the correctness of information in this document. Copyright by Volkswagen AG.

Downloaded from www.Manualslib.com manuals search engine

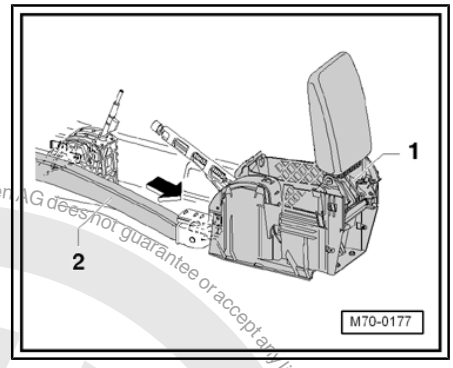

Note

When dismantling Highline centre console, there is no requirement to remove the carrier -1- for centre console trim.

– Remove unions (for centre console ventilation) -2- in direction of -arrow-

Note

There is no requirement to remove the driver or front passenger seats.

Vehicles with DSG or automatic gearbox

– Release selector lever using selector lever emergency release and position selector lever in position “S” ⇒ Power transmission; Rep. Gr. 37 ; Emergency release for selector lever .

Vehicles with manual gearbox

– Select 4th gear with gearstick.

Note

Cover top of lever with a cloth or similar to prevent damage to moulded headliner.

All vehicles

– Remove lights and switches in moulded headliner ⇒ Electrical system; Rep. Gr. 96 ; Lights and switches in roof trim .

– Remove rear roof end strip ⇒ page 238 .

– Remove upper trim for A-pillar on left and right ⇒ page 209 .

– Remove upper trim for B-pillar on left and right ⇒ page 213 .

– Remove C-pillar trim on left and right ⇒ page 217 .

Models with sliding/tilting sunroof

– Push wedge -T10039/1- between frame -1- and moulded headlining -2-.

– Separate frame from moulded headliner using release lever -T10039- in direction of -arrow-, moving along perimeter.

Protected by copyright. Copying for private or commercial purposes, in part or in whole, is not permitted unless authorised by Volkswagen AG. Volkswagen AG does not guarantee or accept any liability with respect to the correctness of information in this document. Copyright by Volkswagen AG.

Downloaded from www.Manualslib.com manuals search engine

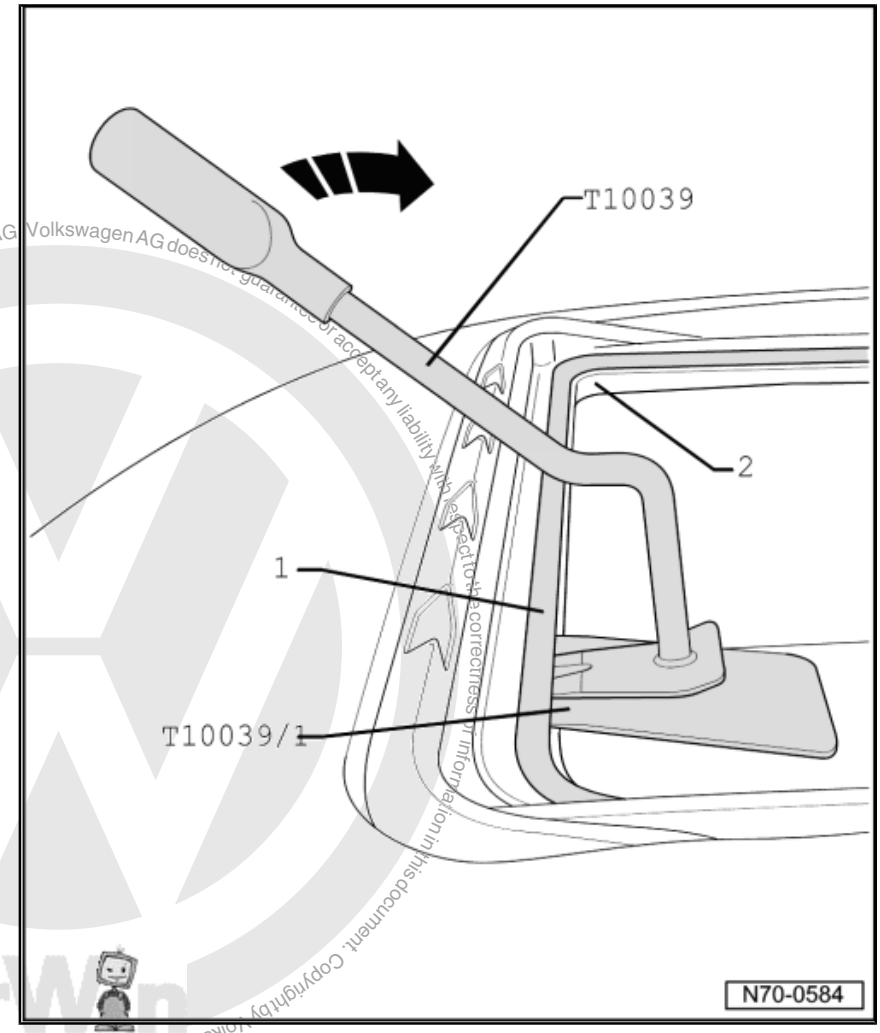

Protected by copyright. Copying for private or commercial purposes, in part or in whole, is not permitted unless authorised by Volkswagen AG. Volkswagen AG does not guarantee or accept any liability with respect to the correctness of information in this document. Copyright by Volkswagen AG.

All vehicles

– Remove left and right sun visors -1- ⇒ page 73 .

– Remove left and right roof grab handles -2- and -3-.

Note

Renew all clips found in retainers for grab handles.

Vehicles with interior mirror with rain sensor

– Remove interior mirror with rain sensor ⇒ page 1 .

Vehicles with interior mirror among vehicles with adaptive cruise control

– Remove interior mirror with adaptive cruise control ⇒ page 3 .

All vehicles

– Remove the two bolts -4- (2 Nm).

Downloaded from www.Manualslib.com manuals search engine

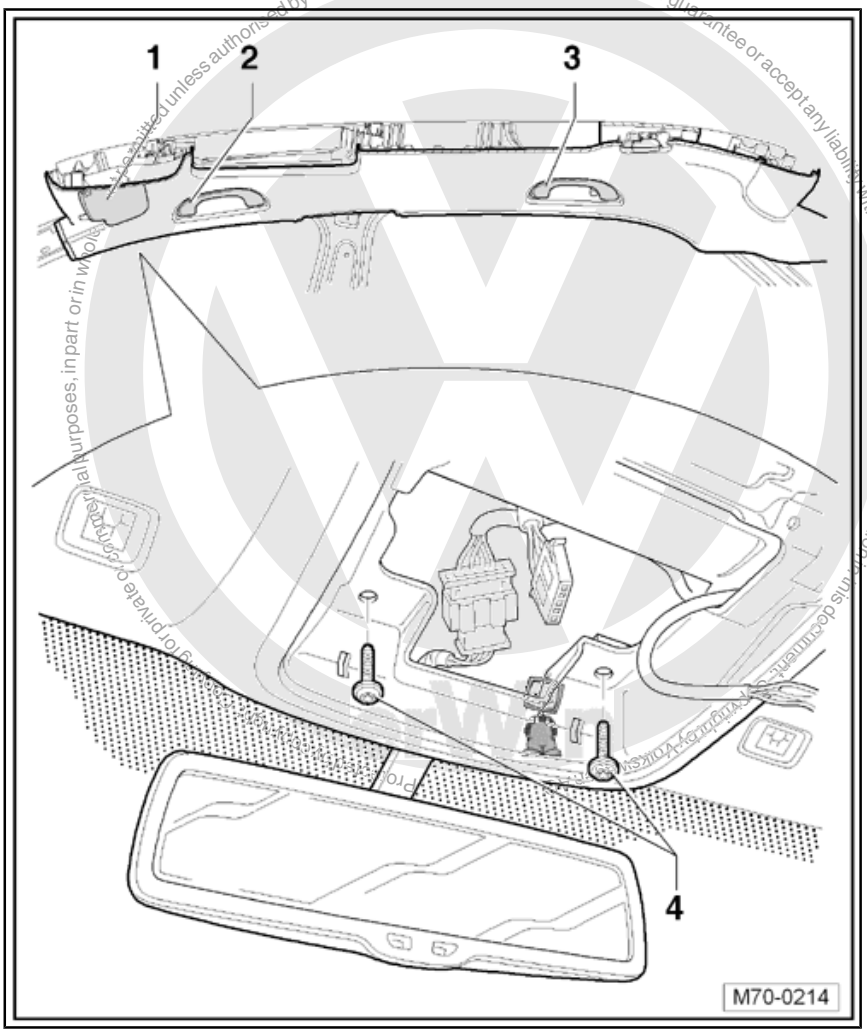

– Remove bolts -1- (2 Nm) on left and right of moulded headliner.

> **Caution**
>
> *Carry out following sequences using extreme care so as not to damage the moulded headliner.*

– Lower moulded headliner slightly and disconnect wiring harness from moulded headliner, depending on equipment fitted to vehicle.

– Move backrest of driver and front passenger seat to rearmost position.

– Remove moulded headliner from vehicle through front passenger side door.

Downloaded from www.Manualslib.com manuals search engine

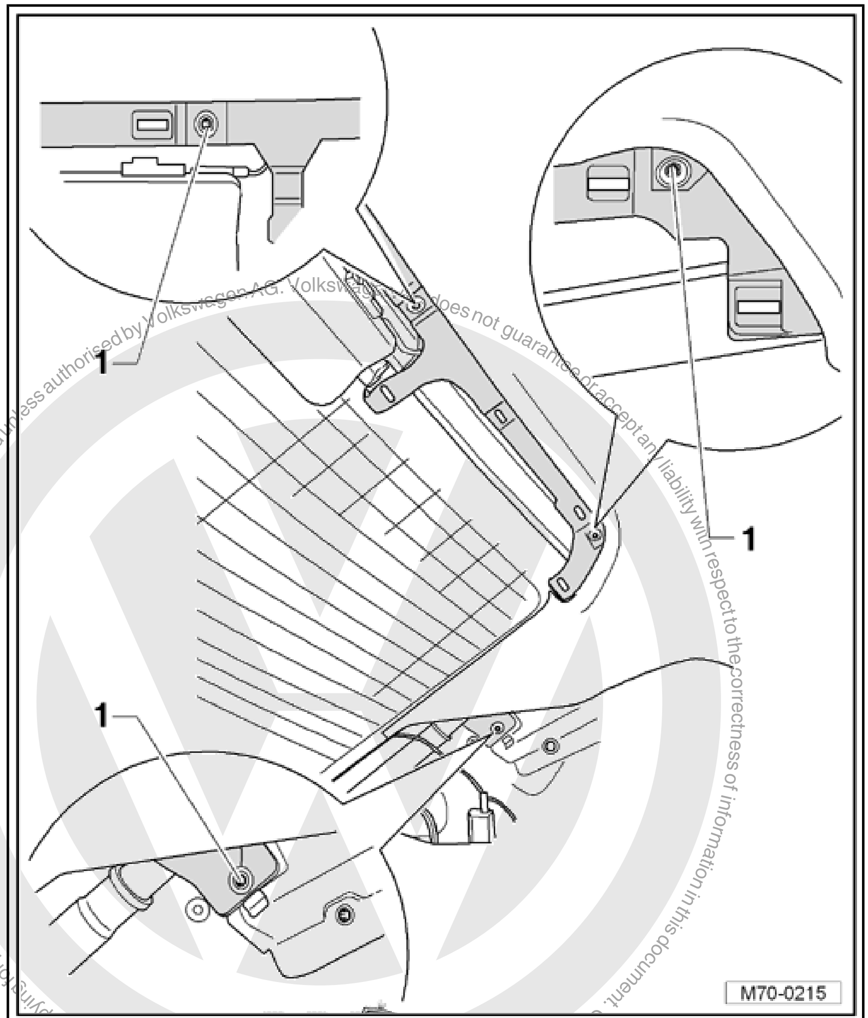

Protected by copyright. Copying for private or commercial purposes, in part or in whole, is not permitted unless authorised by Volkswagen AG. Volkswagen AG does not guarantee or accept any liability with respect to the correctness of information in this document. Copyright by Volkswagen AG.

6.4.2 Installing

– Install in reverse order of removal.

6.5 Removing and installing moulded headliner (Variant)

6.5.1 Removing

Vehicles with panorama sliding roof

– Open panorama sliding roof.

– Switch off ignition.

– Push wedge -T10039/1- between frame -1- and moulded headlining -2-.

Downloaded from www.Manualslib.com manuals search engine

– Separate frame from moulded headliner using release lever -T10039- in direction of -arrow-, moving along perimeter.

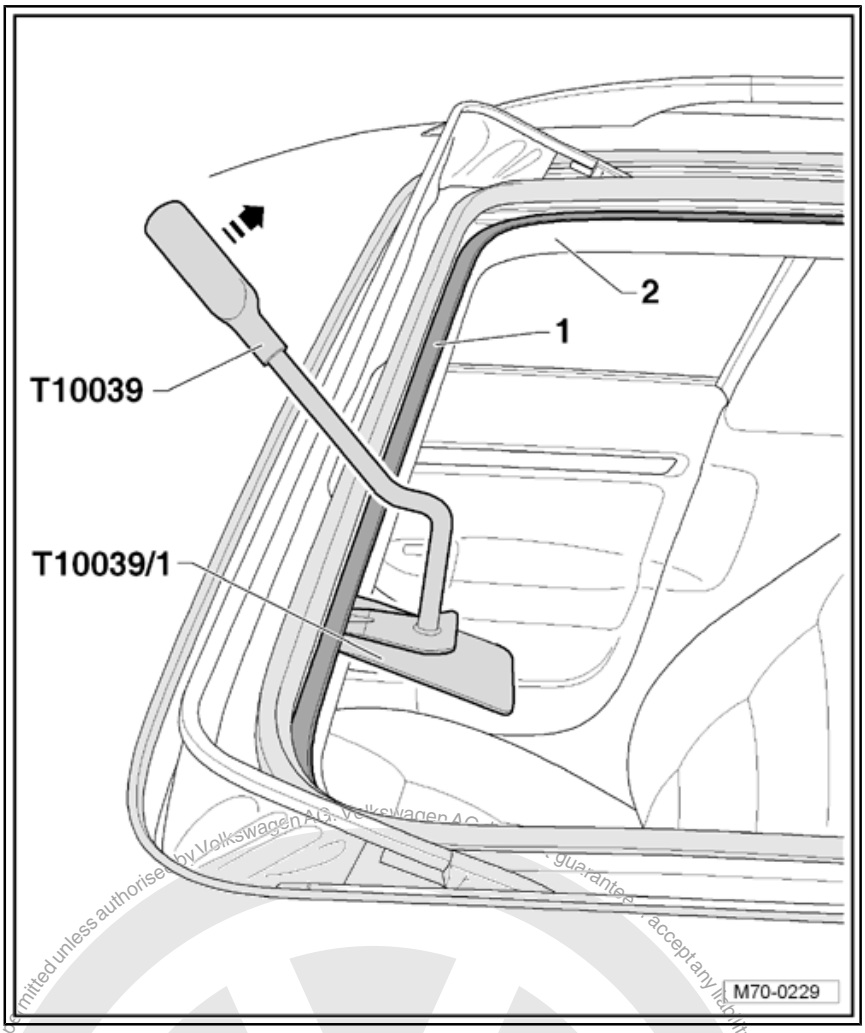

Vehicles with net partition

– Remove net partition bracket -3-.

♦ Vehicles with normal roof ⇒ page 86 .

♦ Vehicles with panorama sliding roof ⇒ page 87

All vehicles

– Remove roof end strip ⇒ page 240

– Remove upper trim for A-pillar on left and right ⇒ page 209 .

– Remove upper trim for B-pillar on left and right ⇒ page 213 .

– Remove C-pillar trim on left and right ⇒ page 217 .

– Remove D-pillar trim on left and right ⇒ page 219 .

– Remove lights and switches in moulded headliner ⇒ Electrical system; Rep. Gr. 96 ; Lights and switches in roof trim .

– Remove left and right sun visors -1- ⇒ page 73 .

– Remove the two bolts -4- (2 Nm).

Protected by copyright. Copying for private or commercial purposes, in part or in whole, is not permitted unless authorised by Volkswagen AG. Volkswagen AG does not guarantee or accept any liability with respect to the correctness of information in this document. Copyright by Volkswagen AG.

Downloaded from www.Manualslib.com manuals search engine

– Remove left and right roof grab handles -2- ⇒ page 81 .

– Lower moulded headliner slightly and disconnect wiring harness from moulded headliner, depending on equipment fitted to vehicle.

– Fold front seat backrests completely to rear.

– Take out moulded headliner through opened rear lid.

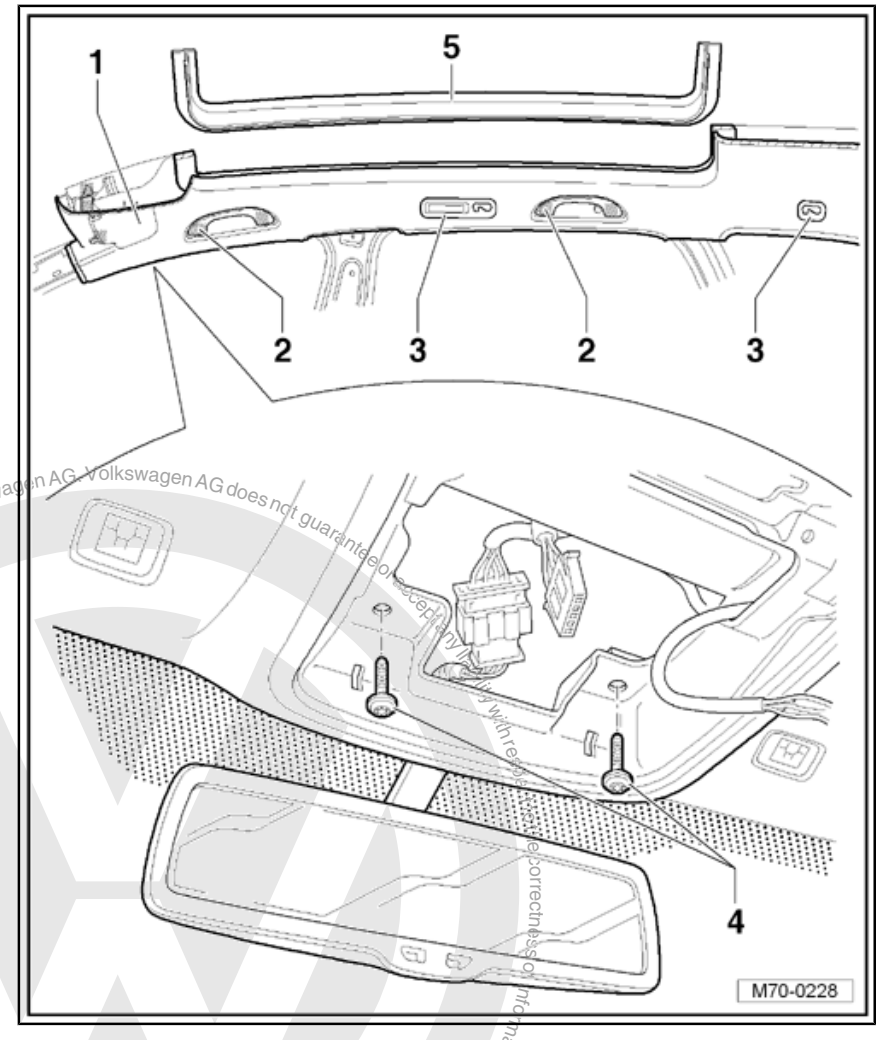

6.5.2 Installing

– Install in reverse order of removal.

6.6 Removing and installing roof insulation/ reinforcement (Variant)

6.6.1 Removing

– Remove moulded headlining ⇒ page 245 .

– Cut roof insulation/reinforcement -1- into approx. 6 cm wide strips -2- lengthwise using a carpet knife.

Protected by copyright. Copying for private or commercial purposes, in part or in whole, is not permitted unless authorised by Volkswagen AG. Volkswagen AG does not guarantee or accept any liability with respect to the correctness of information in this document. Copyright by Volkswagen AG.

Downloaded from www.Manualslib.com manuals search engine

– Pull strips -2- off roof.

– Cut back adhesive residue -3- using an electric cutter - V.A.G 1561 A- and cutting blade -V.A.G 1561/20- -4-.

Note

If paint structure has been damaged on removal of the roof insulation/reinforcement, repair paint damage according to guidelines of ⇒ Paint workshop manual .

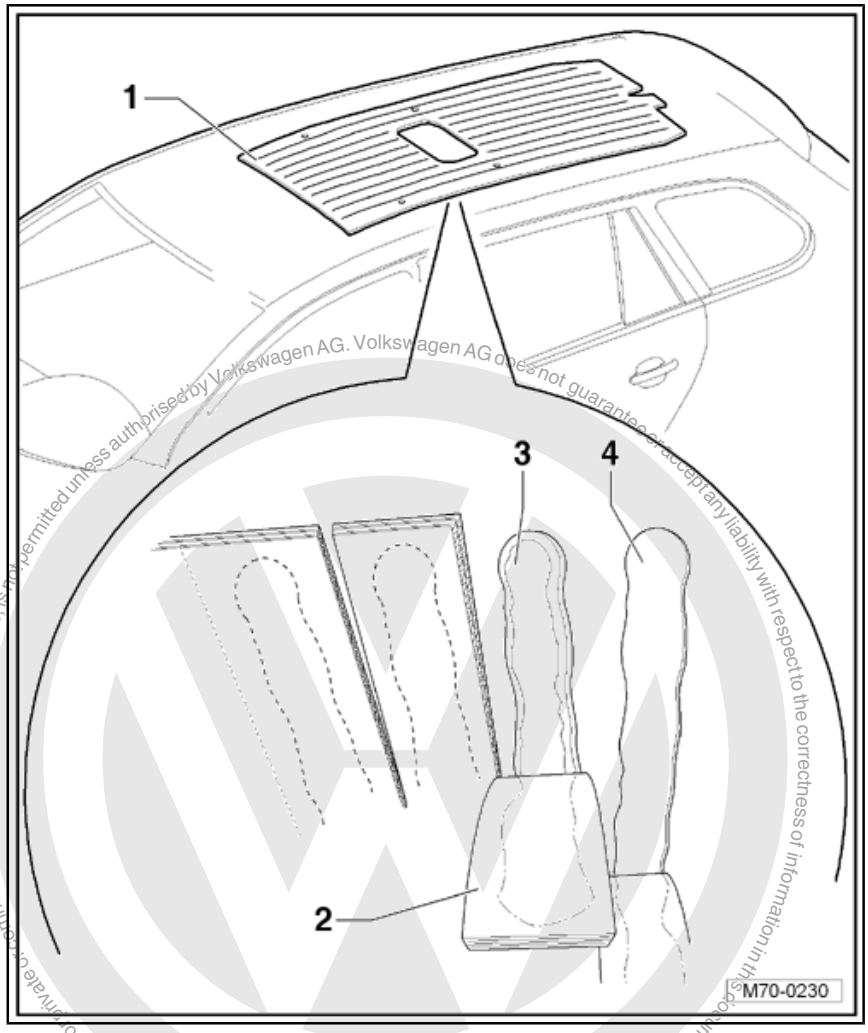

6.6.2 Installing

Note

Observe adhesive processing instructions when installing roof insulation/reinforcement.

– Use hand-cartridge gun -V.A.G 1628- to apply 1K assembly adhesive -D 190 MKD A3- -2- onto roof insulation/reinforcement -1-.

– Dimension a = 61 mm

Protected by copyright. Copying for private or commercial purposes, in part or in whole, is not permitted unless authorised by Volkswagen AG. Volkswagen AG does not guarantee or accept any liability with respect to the correctness of information in this document. Copyright by Volkswagen AG.

Downloaded from www.Manualslib.com manuals search engine

- Dimension b = 25 mm
- Dimension c = 34.5 mm
- Dimension d = 19 mm
- Dimension e = 1.5 mm
- Transport roof insulation/reinforcement into vehicle via rear lid aperture and press fully onto roof.

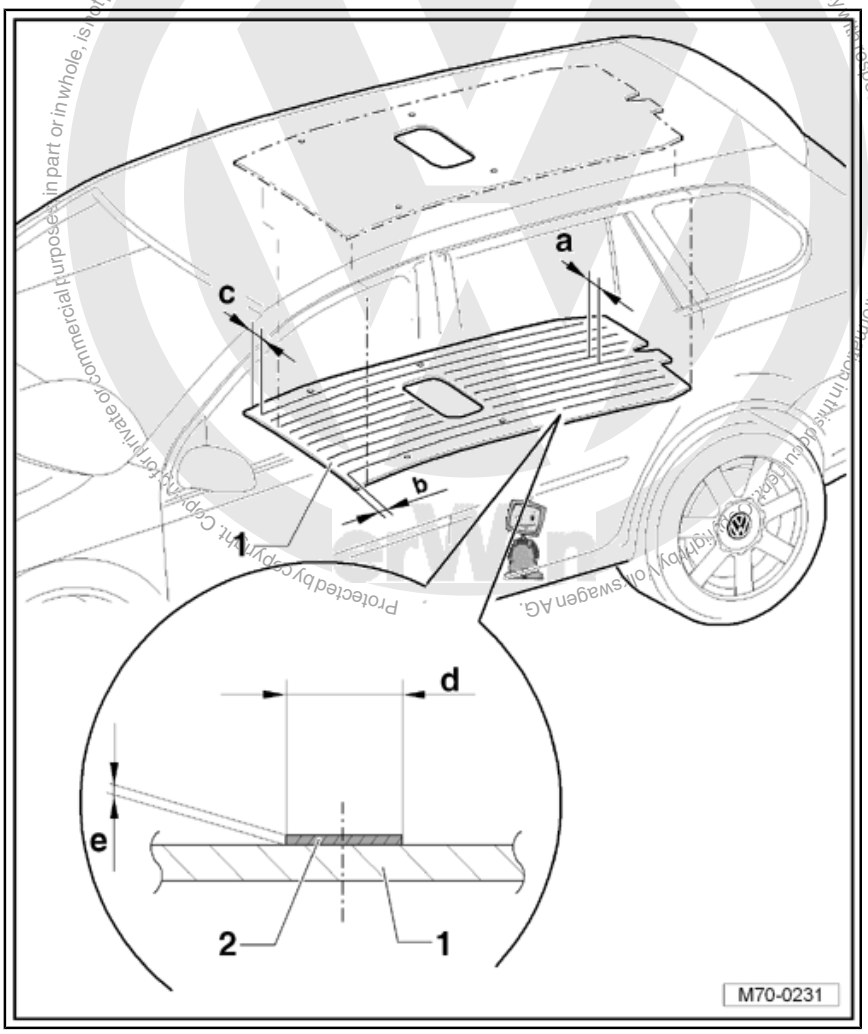

Protected by copyright. Copying for private or commercial purposes, in part or in whole, is not permitted unless authorised by Volkswagen AG. Volkswagen AG does not guarantee or accept any liability with respect to the correctness of information in this document. Copyright by Volkswagen AG.

Downloaded from www.Manualslib.com manuals search engine

72 – Seat frames

1 Front seats

1.1 Tools

Special tools and workshop equipment required

- Airbag adapter -VAS 6229-

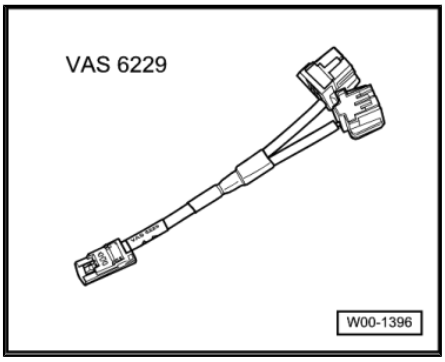

- Airbag adapter -VAS 6281-

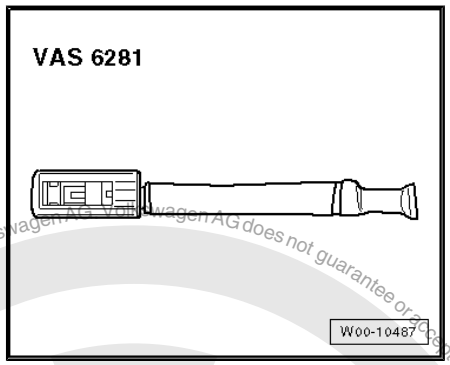

- Assembly tool -3399-

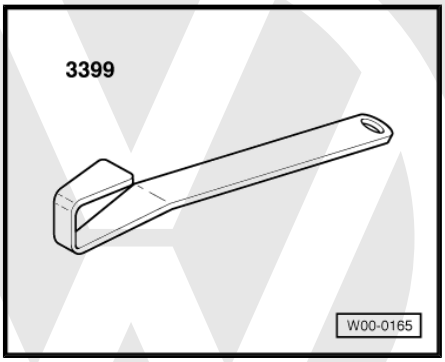

Protected by copyright. Copying for private or commercial purposes, in part or in whole, is not permitted unless authorised by Volkswagen AG. Volkswagen AG does not guarantee or accept any liability with respect to the correctness of information in this document. Copyright by Volkswagen AG.

Downloaded from www.Manualslib.com manuals search engine

- Engine and gearbox support -VAS 6095-

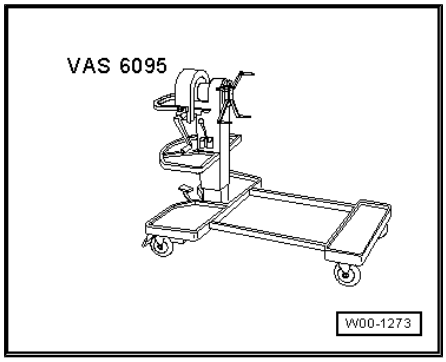

- Seat repair stand -VAS 6136-

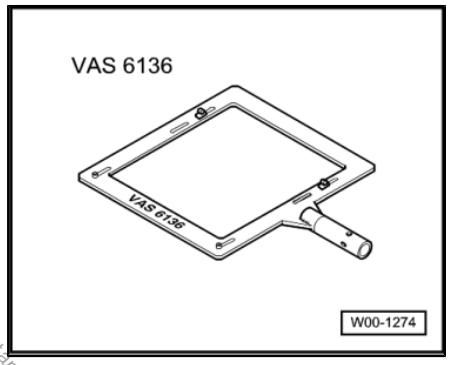

- Pop rivet pliers -VAS 5072-

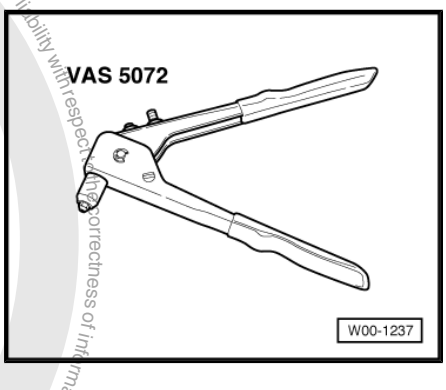

1.2 Removing and installing front seat

Note

- *Removal and installation is described for the left seat. Apply the same instructions for removal and installation of the right seat as appropriate.*
- *Removal and installation is described for a manually adjustable seat. Apply the same instructions for removal and installation of an electrically adjustable seat as appropriate.*

1.2.1 Removing

WARNING

Follow safety precautions when working on airbag.

– Remove drawer from seat, if fitted.

Copyright by Volkswagen AG. Volkswagen AG does not guarantee or accept any liability with respect to the correctness of information in this document. Copyright by Volkswagen AG. Copying for private or commercial purposes, in part or in whole, is not permitted unless authorised by Volkswagen AG.

Downloaded from www.Manualslib.com manuals search engine

– Move seat to uppermost position using height adjustment.
– Move seat to forwardmost position using longitudinal adjustment.
– Remove bolts -3- and -4-.
– Move seat to rearmost position using longitudinal adjustment.
– Disconnect vehicle battery ⇒ Electrical system; Rep. Gr. 27 ; Disconnecting and reconnecting battery .
– Remove cover cap -5- from coupling station.

WARNING

Electrostatic discharges may result in unintentional triggering of airbag. Therefore, the mechanic must electrostatically discharge him/herself before disconnecting wiring. This can be done by briefly touching the body or striker plate of the door.

– Depending on equipment fitted to vehicle, disconnect seat wiring harness from coupling station.
– Connect airbag adapter -VAS 6229- or airbag adapter -VAS 6281- to side airbag wiring harness -6-.
– Remove bolts -1- and -2-.
– Release wiring harness from mounting in floor.

Caution

If seat is lifted out of vehicle or transported, it must not, in order to prevent damage, be gripped by attaching parts such as, e.g. belt buckle, lever for seat longitudinal adjustment, lever for seat height adjustment or seat trim panels.

– Insert right hand between backrest and seat cushion, grip front end of seat cushion with left hand and lift seat out of vehicle.

Protected by copyright. Copyright for private or commercial purposes in any form whole, is not permitted unless authorised. Volkswagen AG. Volkswagen AG does not guarantee or accept any liability with respect to the correctness of information in this document. Copyright by Volkswagen AG.

Downloaded from www.Manualslib.com manuals search engine

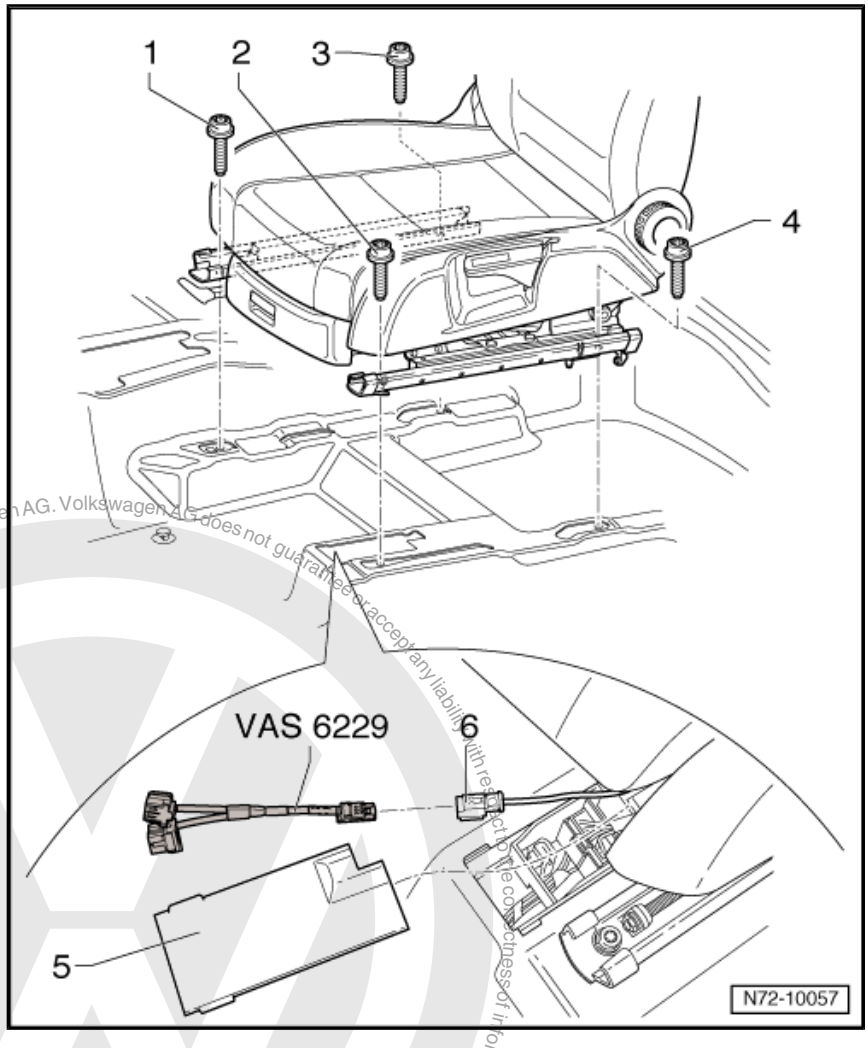

1.2.2 Installing

- Lift seat through front door aperture.
- Locate seat on tunnel side centralizing pins and into respective openings in floor.
- Tighten bolt -1- (40 Nm).
- Tighten bolt -2- (40 Nm).

> ⚠ **WARNING**
>
> ***If, when installing a seat a thread in seat cross member mounting plate is damaged, reworking damaged threads is prohibited! In this case, the seat cross member mounting plate must be replaced.***

If seat cross member mounting plate threads have been damaged:

- Replace the affected seat cross member mounting plate ⇒ Body Repairs; Rep. Gr. 51 .
- Remove airbag adapter -VAS 6229- .

Copyright by Volkswagen AG. Volkswagen AG does not guarantee or accept any liability with respect to the correctness of information in this document. Copyright by Volkswagen AG. Protected by copyright. Copying for private or commercial purposes, in part or in whole, is not permitted unless authorised by Volkswagen AG.

Downloaded from www.Manualslib.com manuals search engine

- Lock side airbag wiring harness -6- into coupling station.
- Depending on equipment fitted to vehicle, reconnect all other wiring harnesses into coupling station.
- Secure wiring harness in fastener on floor and fit cover cap -5- onto coupling station.
- Reinstall seat drawer, if fitted.
- Switch ignition on.

> ⚠ **WARNING**
>
> ***Ensure that nobody is in vehicle.***

- Reconnect vehicle battery ⇒ Electrical system; Rep. Gr. 27 ; Disconnecting and reconnecting battery .
- Move seat to forwardmost position using longitudinal adjustment.
- Tighten bolt -3- (40 Nm).
- Tighten bolt -4- (40 Nm).

> ⚠ **WARNING**
>
> ***If, when installing a seat a thread in seat cross member mounting plate is damaged, reworking damaged threads is prohibited! In this case, the seat cross member mounting plate must be replaced.***

Protected by copyright. Copying for private or commercial purposes, in part or in whole, is not permitted unless authorised by Volkswagen AG. Volkswagen AG does not guarantee or accept any liability with respect to the correctness of information in this document. Copyright by Volkswagen AG.

Downloaded from www.Manualslib.com manuals search engine

If seat cross member mounting plate threads have been damaged:

– Renew the affected seat cross member mounting plate ⇒ Body Repairs; Rep. Gr. 51 .

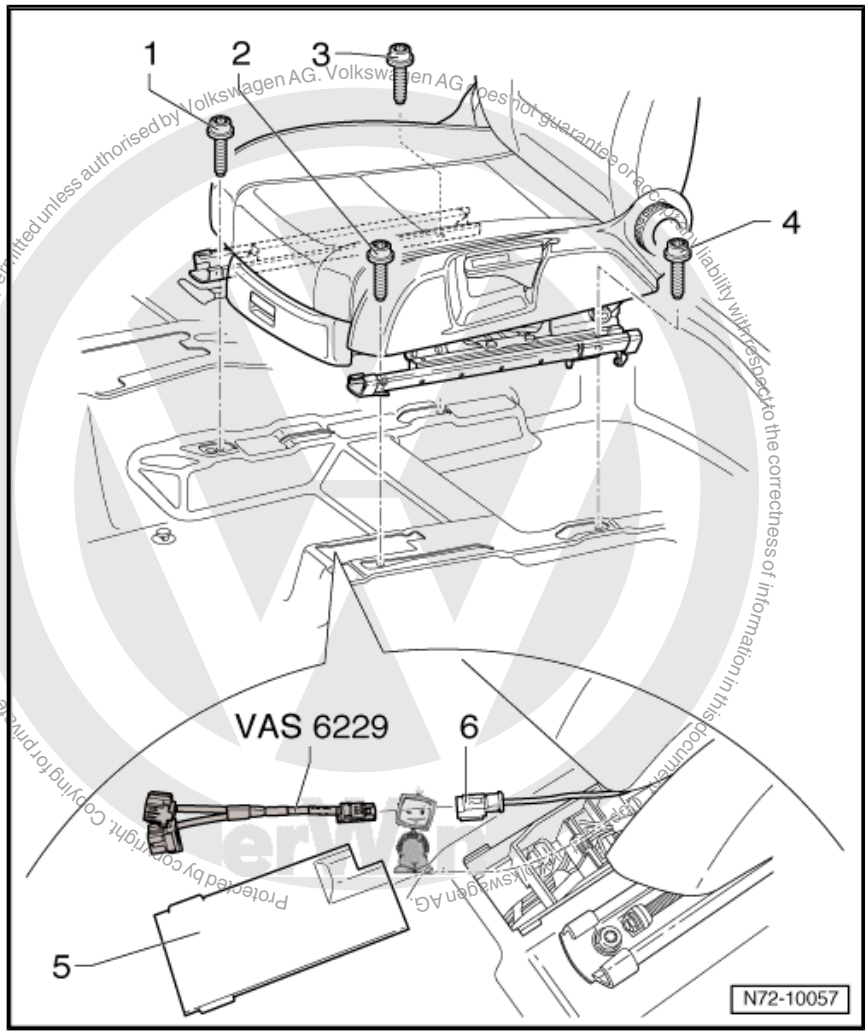

1.3 Removing and installing left and right trim on seat

1.3.1 Removing and installing left trim on seat

Note

Removal and installation is described for the left seat. Apply the same instructions for removal and installation of the right seat as appropriate.

Removing

– Using a small screwdriver, press metal tab of fastener -2- inwards and pull off handle -3- from adjustment lever -1-.

Downloaded from www.Manualslib.com manuals search engine

Note

For greater clarity, the retaining clip is shown removed in the illustration.

- Remove retaining clip -2- from adjustment lever -1-.
- Using assembly tool -3399- , grasp behind locking device of backrest adjustment knob -4-.
- Lever assembly tool -3399- outwards -arrow A- and release backrest adjustment knob from seat.
- Press clamping pin -5- inwards and remove fastener -6-.
- Detach trim -7- forwards from mountings in seat frame.

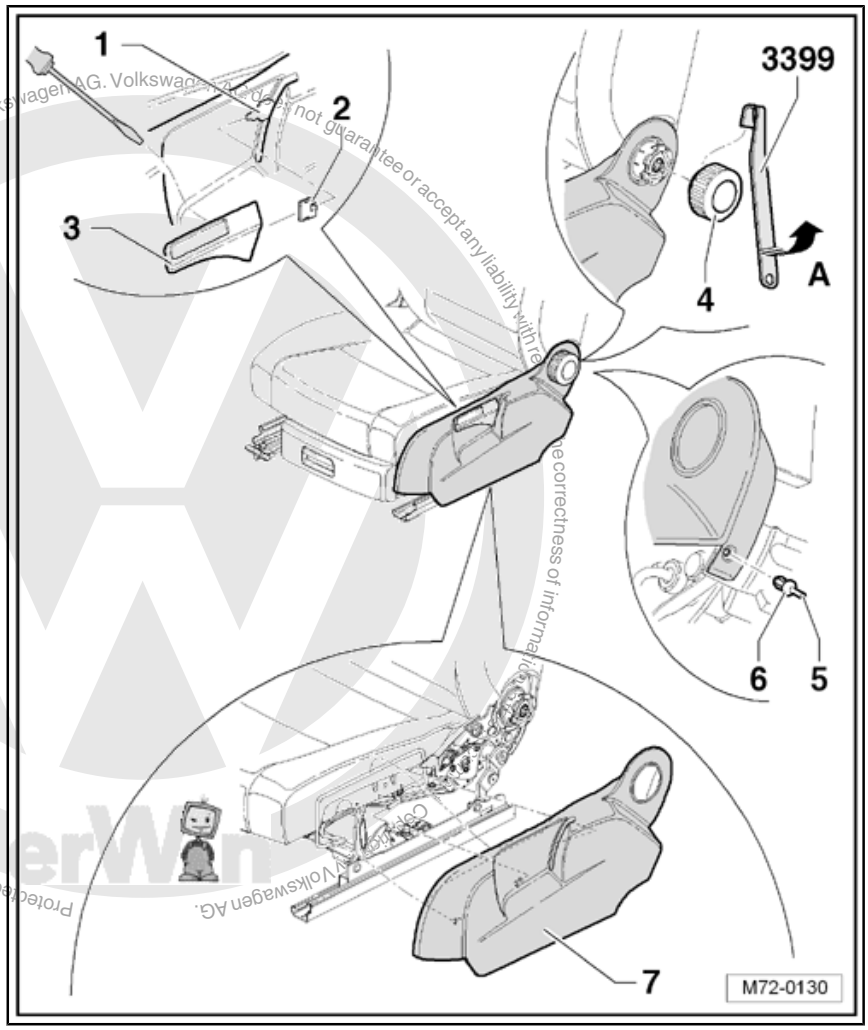

Protected by copyright. Copying for private or commercial purposes, in part or in whole, is not permitted unless authorised by Volkswagen AG. Volkswagen AG does not guarantee or accept any liability with respect to the correctness of information

Installing

- Install in reverse order of removal.

Downloaded from www.Manualslib.com manuals search engine

1.3.2 Removing and installing right trim on seat

Note

Removal and installation is described for the left seat. Apply the same instructions for removal and installation of the right seat as appropriate.

Removing

– Remove front seat ⇒ page 251 .

– Press clamping pin -1- inwards and remove fastener -2-.

– Pull belt buckle outwards.

Note

Seat belt buckle is not shown on illustration.

– Release locking hooks -3- and release trim -4- from seat.

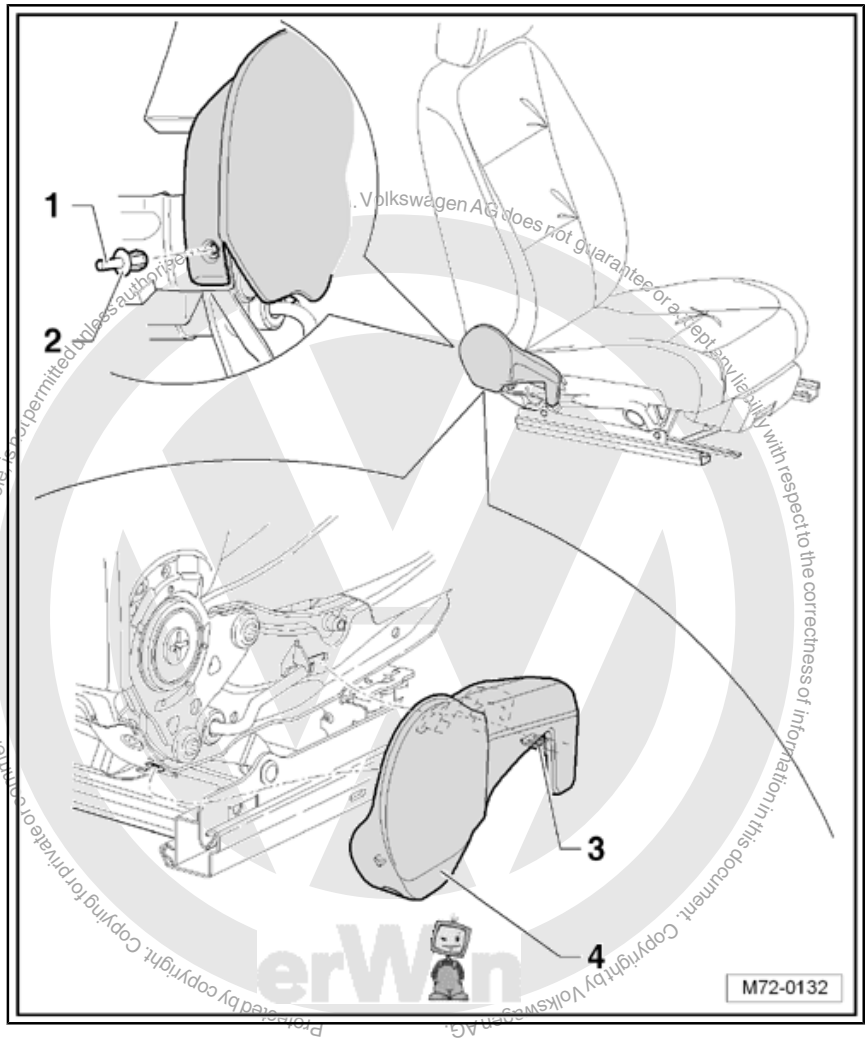

Protected by copyright. Copyright for private or commercial purposes, in part or in whole, is not permitted unless authorised by Volkswagen AG. Volkswagen AG does not guarantee or accept any liability with respect to the correctness of information in this document. Copyright by Volkswagen AG.

Downloaded from www.Manualslib.com manuals search engine

Installing

– Install in reverse order of removal.

1.4 Removing and installing left and right trim on folding front passenger seat

1.4.1 Removing and installing right trim on folding front passenger seat

Removing

– Using a small screwdriver, press metal tab of fastener -2- inwards and pull off handle -3- from adjustment lever -1-.

Note

For greater clarity, the retaining clip is shown removed in the illustration.

– Remove retaining clip -2- from adjustment lever -1-.
– Using assembly tool -3399- , grasp behind lever -4- of backrest release.
– Lever assembly tool -3399- outwards -arrow A- and thereby disengage backrest release lever from seat.
– Using assembly tool -3399- , grasp behind locking device of backrest adjustment knob -5-.
– Lever assembly tool -3399- outwards -arrow B- and release backrest adjustment knob from seat.
– Press clamping pin -6- inwards and remove fastener -7-.
– Detach trim -8- forwards from mountings in seat frame.

Protected by copyright. Copying for private or commercial purposes, in part or in whole, is not permitted unless authorised by Volkswagen AG. Volkswagen AG does not guarantee or accept any liability with respect to the correctness of information in this document. Copyright by Volkswagen AG.

Downloaded from www.Manualslib.com manuals search engine

– Remove trim -9- from seat frame.

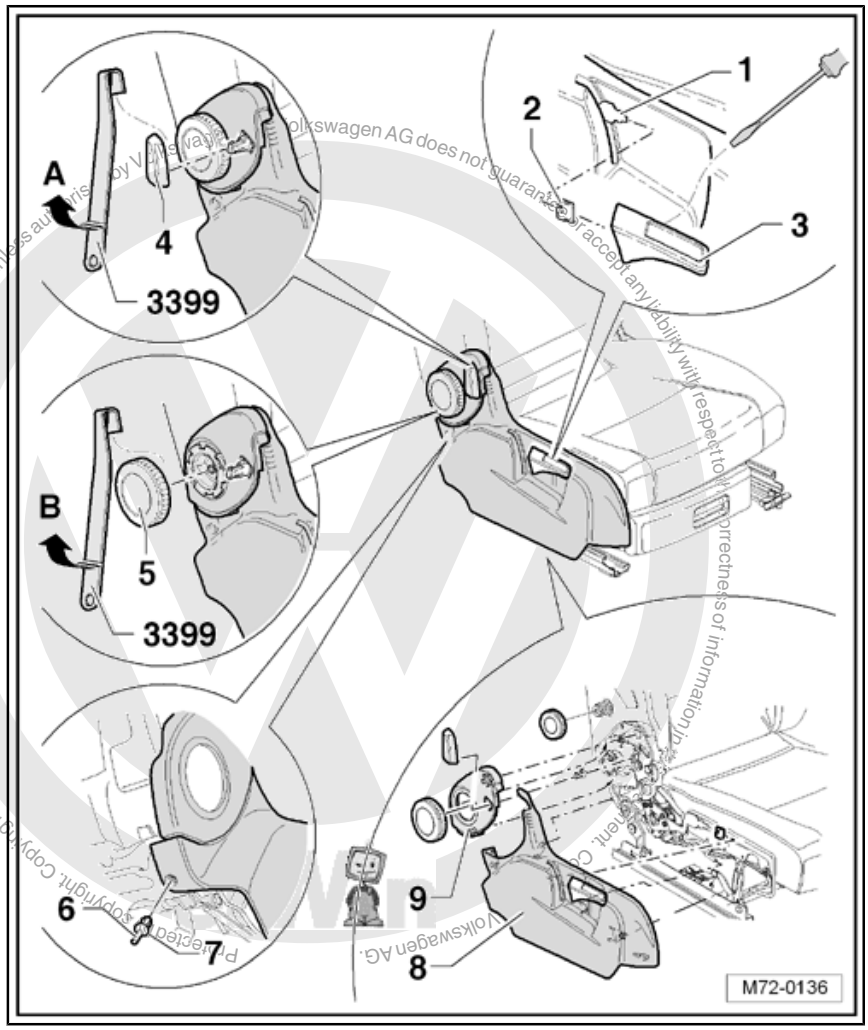

Installing

– Install in reverse order of removal.

1.4.2 Removing and installing left trim on folding front passenger seat

Removing

– Remove front seat ⇒ page 251 .

– Press clamping pin -1- inwards and remove fastener -2-.

– Pull belt buckle outwards.

Note

Seat belt buckle is not shown on illustration.

– Release locking hooks -3- and release trim -4- from seat.

Downloaded from www.Manualslib.com manuals search engine

– Release locking hooks -5- and release trim -6- from seat.

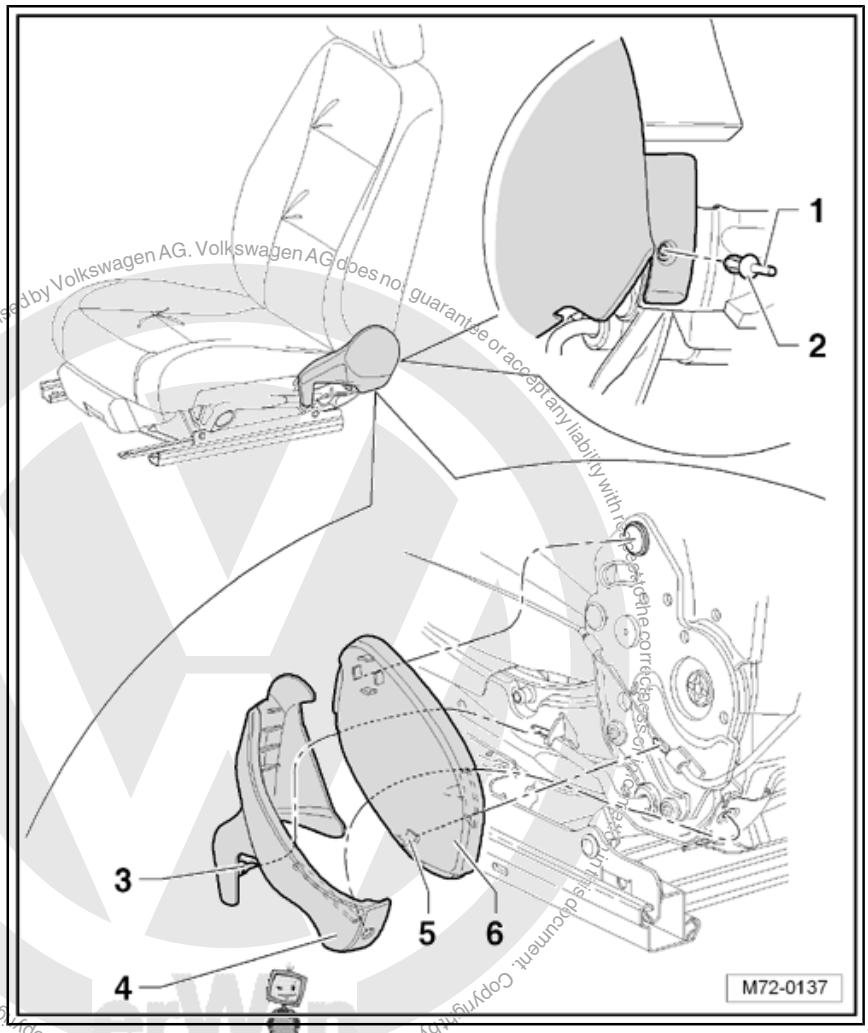

Protected by copyright. Copyright by Volkswagen AG. Volkswagen AG does not guarantee or accept any liability with respect to the correctness of information in this document. Copyright by Volkswagen AG. Protected by copyright. Copyright for private or commercial purposes, in part or in whole, is not permitted unless authorised by Volkswagen AG.

Installing

– Install in reverse order of removal.

1.5 Removing and installing right trim on seat with electrically adjustable backrest (USA)

Removing

– Using a small screwdriver, press metal tab of fastener -2- inwards and pull off handle -3- from adjustment lever -1-.

Note

For greater clarity, the retaining clip is shown removed in the illustration.

– Remove retaining clip -2- from adjustment lever -1-.

– Using assembly tool -3399- , grasp behind locking device of backrest adjustment knob -8-.

– Lever assembly tool -3399- outwards -arrow A- and release backrest adjustment knob from seat.

Downloaded from www.Manualslib.com manuals search engine

– Press clamping pin -7- inwards and remove fastener -6-.
– Detach trim -5- forwards from mountings in seat frame and disconnect wiring from switch -4-.

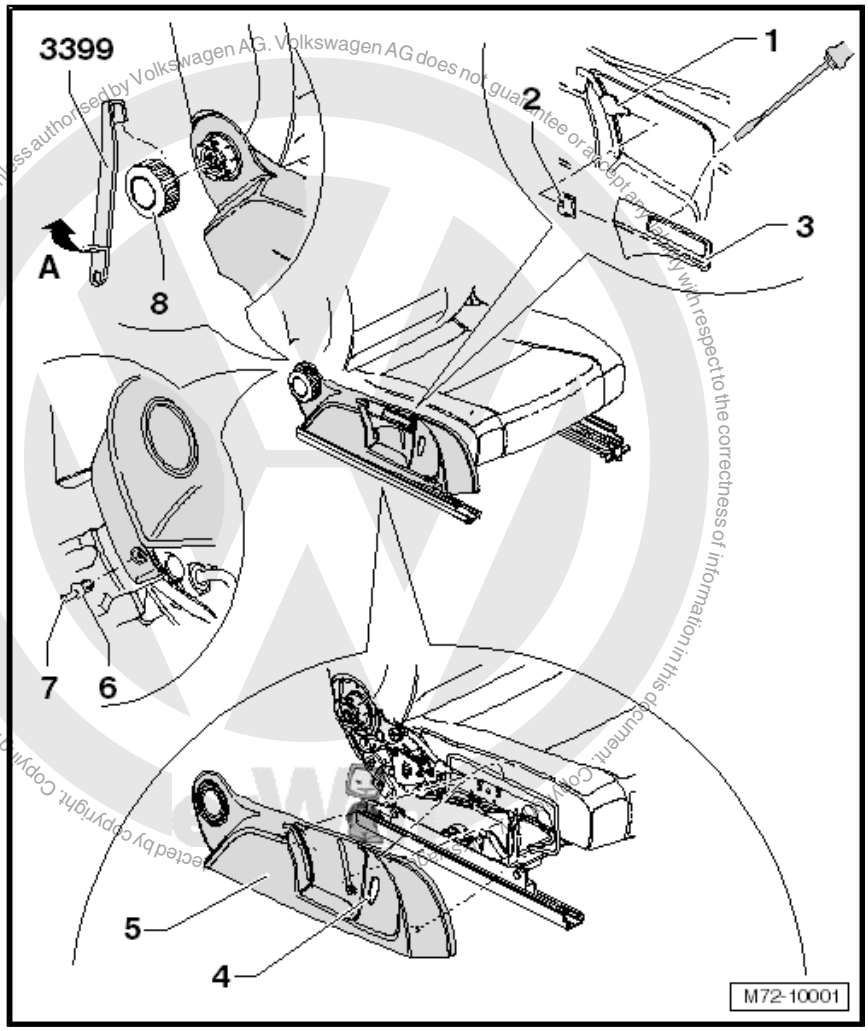

Protected by copyright. Copyright for private or commercial purposes, in part or in whole, is not permitted unless authorised by Volkswagen AG. Volkswagen AG does not guarantee or accept any liability with respect to the correctness of information in this document. Copyright by Volkswagen AG.

Installing

– Install in reverse order of removal.

1.6 Removing and installing left trim on electrically operated seat

Note

Removal and installation is described for the left seat. Apply the same instructions for removal and installation of the right seat as appropriate.

1.6.1 Removing

– Switch off ignition.
– Press clamping pin -1- inwards and remove fastener -2-.

Downloaded from www.Manualslib.com manuals search engine

– Pull rear section of trim -3- outwards, then swing trim downwards -arrow A-.
– Detach rear trim from seat.
– Pull front section of trim -4- upwards, then swing trim outwards -arrow B-.
– Press front section of trim to rear -arrow C-.
– Detach front section of trim from seat and disconnect wiring harnesses from switches -5-.

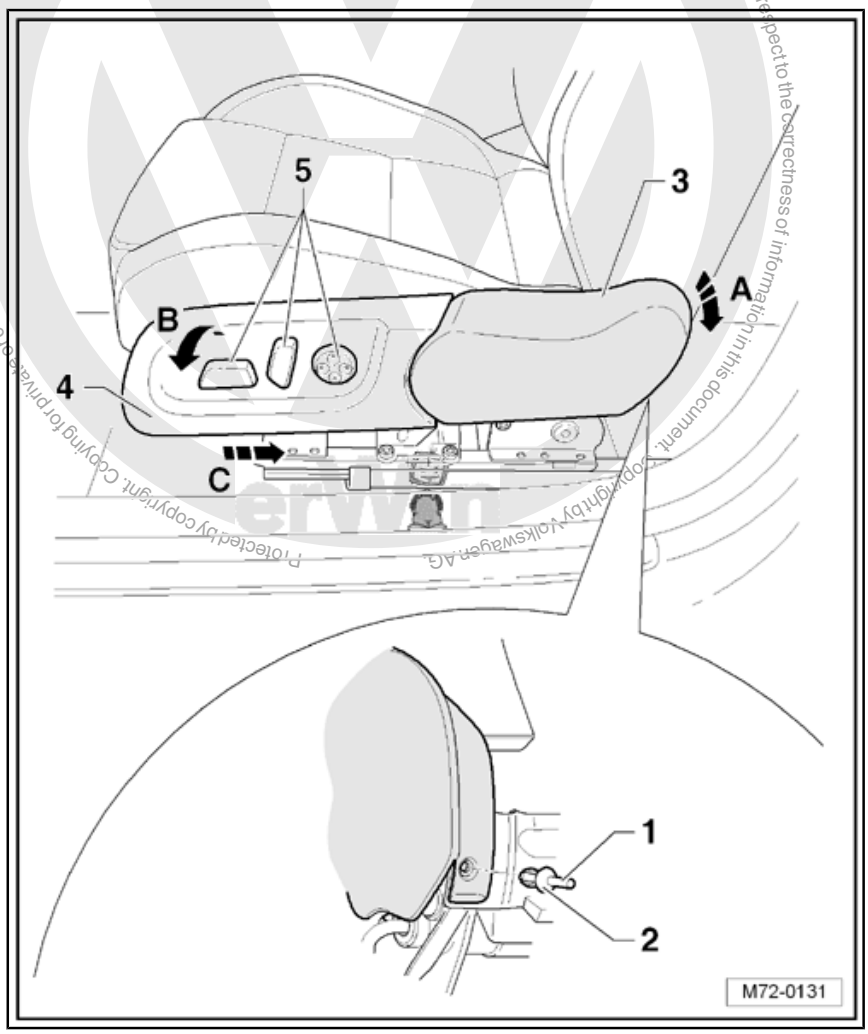

1.6.2 Installing

– Install in reverse order of removal.

1.7 Removing and installing lumbar adjustment lever (Jetta 2010 ▸, Golf Variant 2010 ▸)

The lumbar adjustment lever is optionally installed on the following seats:

- Front seats with manual height adjustment
- Front passenger seat with through-loading function

Downloaded from www.Manualslib.com manuals search engine

Note

Removal and installation are described for the left vehicle side.
Follow same instructions for the right side as appropriate.

1.7.1 Removing

– Pull lumbar adjustment lever from shaft.

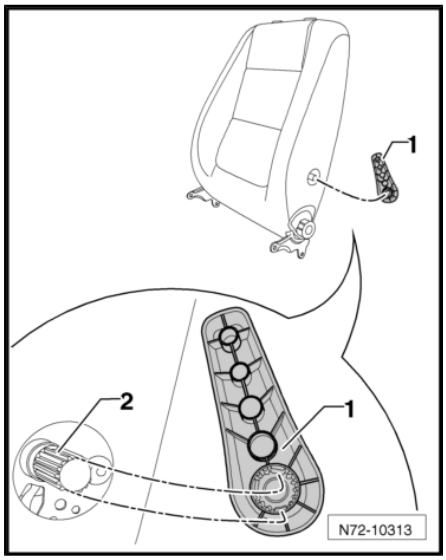

1.7.2 Installing

– Install in reverse order of removal.

Note

Ensure that teeth on lumbar adjustment lever -1- align with teeth on shaft -2-.

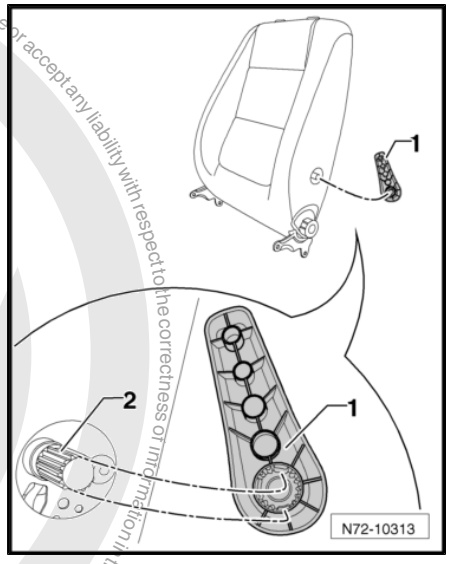

1.8 Removing and installing seat drawer mounting

Note

Removal and installation is described for the left seat. Apply the same instructions for removal and installation of the right seat as appropriate.

Protected by copyright. Copyright by Volkswagen AG. Volkswagen AG does not guarantee or accept any liability with respect to the correctness of information in this document. Copyright by Volkswagen AG. Reproduction for commercial purposes, in part or in whole, is not permitted unless authorised by Volkswagen AG.

Downloaded from www.Manualslib.com manuals search engine

1.8.1 Removing

– Remove drawer -1- from mountings.
– Remove front seat ⇒ page 251 .
– Remove left trim on seat:
♦ Seat with no folding backrest ⇒ page 255 .
♦ Seat with folding backrest ⇒ page 258 .
– Remove bolt -2- (2 Nm).
– Remove bolts -3- (2 Nm).
– Remove mounting -4- from seat frame.

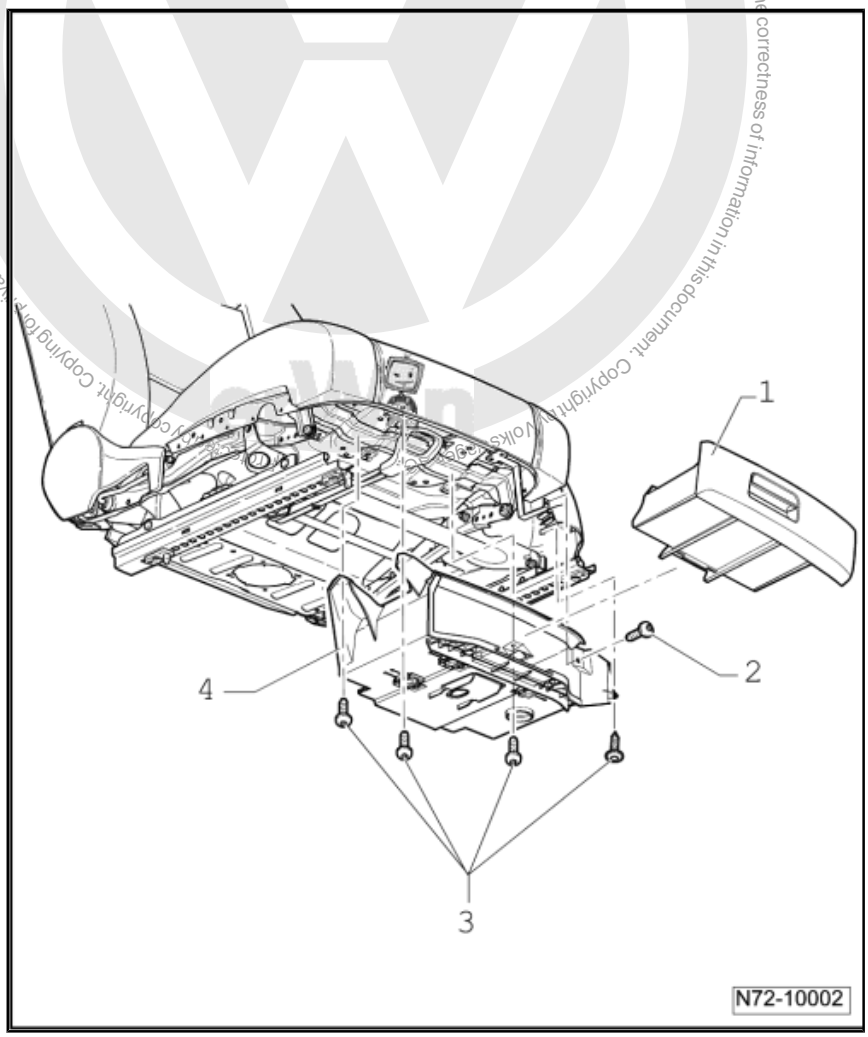

1.8.2 Installing

– Install in reverse order of removal.

Downloaded from www.Manualslib.com manuals search engine

1.9 Removing and installing front seat bar and operating lever

Note

Removal and installation is described for the left seat. Apply the same instructions for removal and installation of the right seat as appropriate.

1.9.1 Removing

– Remove left trim on seat:

♦ Seat with no folding backrest ⇒ page 255 .

♦ Seat with folding backrest ⇒ page 258 .

– Remove the two bolts -1- (3.5 Nm) and remove operating lever -2-.

– Remove the two bolts -3- (3.5 Nm) and remove bar -4-.

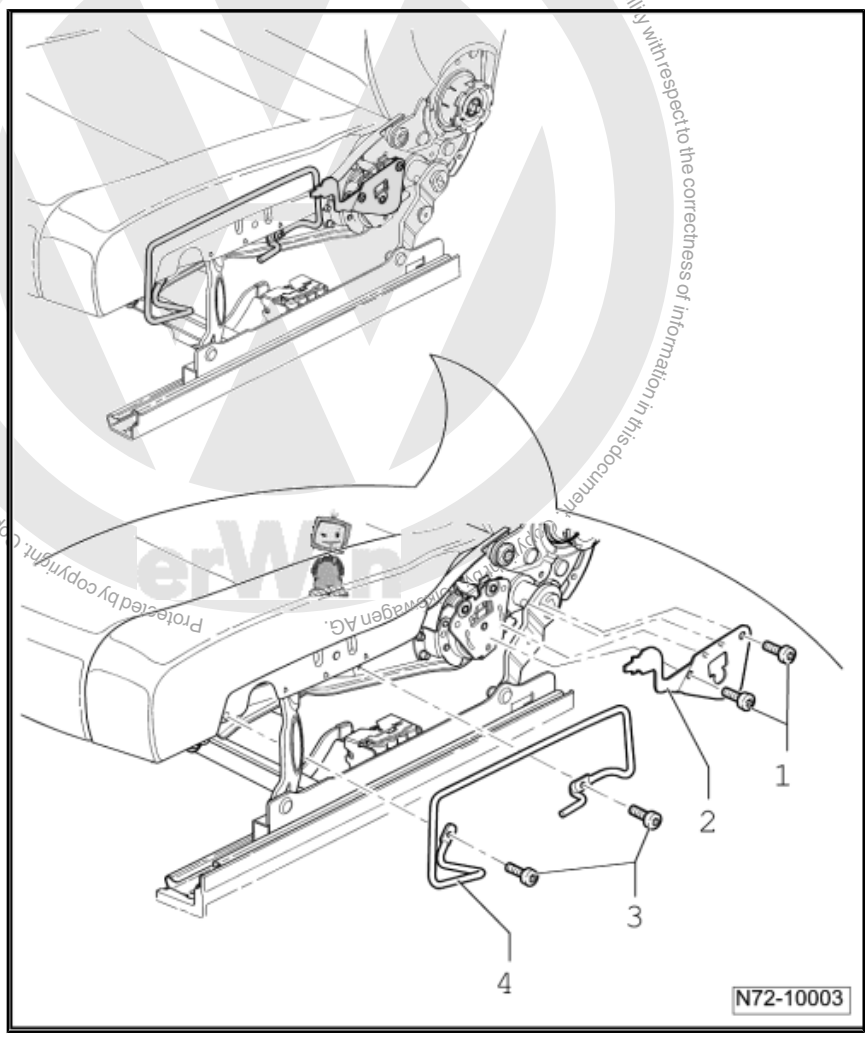

Protected by copyright. Copying for private or commercial purposes, in part or in whole, is not permitted unless authorised by Volkswagen AG. Volkswagen AG does not guarantee or accept any liability with respect to the correctness of information in this document.

Downloaded from www.Manualslib.com manuals search engine

1.9.2 Installing

– Install in reverse order of removal.

1.10 Removing and installing bar and operating lever on seat with electrically adjustable backrest (USA)

Removing

– Remove right trim on seat with electrically adjustable backrest ⇒ page 260 .

– Remove the two bolts -4- (3.5 Nm) and remove operating lever -3-.

– Remove the two bolts -2- (3.5 Nm) and remove bar -1-.

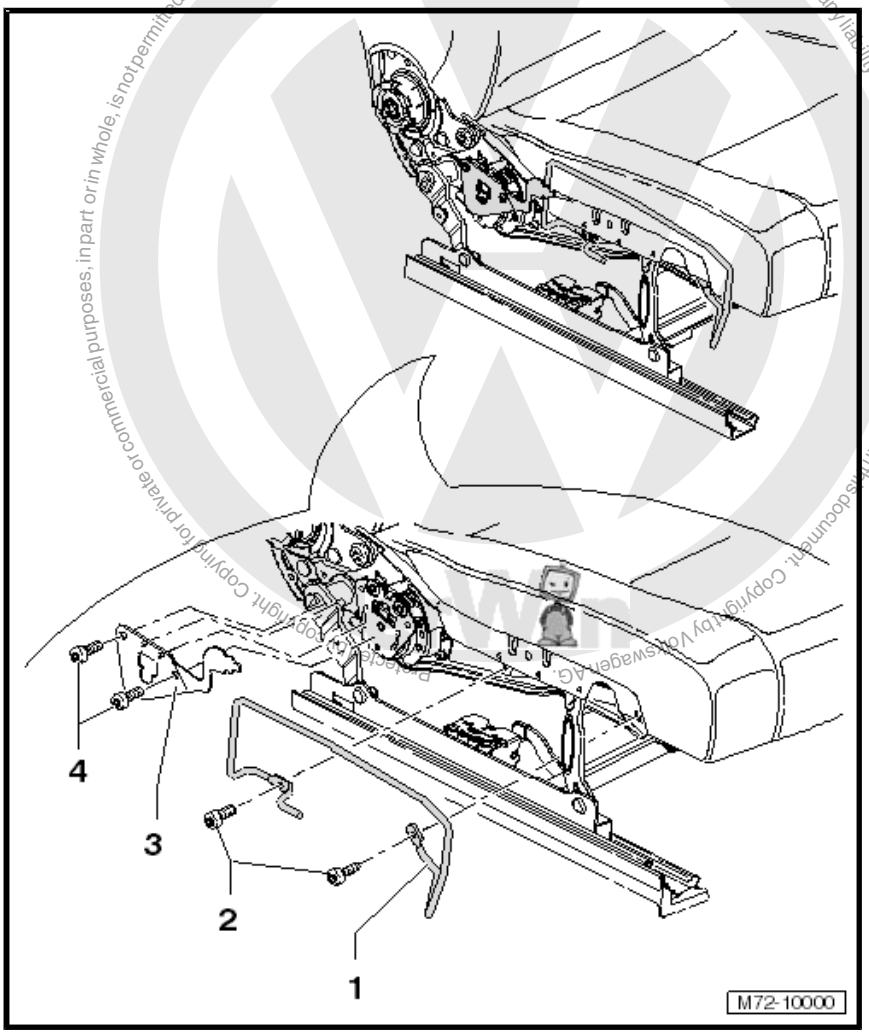

Installing

– Install in reverse order of removal.

Downloaded from www.Manualslib.com manuals search engine

1.11 Removing and installing bar and operating lever on electrically adjustable seat

Note

Removal and installation is described for the left seat. Apply the same instructions for removal and installation of the right seat as appropriate.

1.11.1 Removing

- Switch off ignition.
- Remove left trim on electrically adjustable seat ⇒ page 261 .
- Remove the two bolts -1- (3.5 Nm) and remove bar -2- from seat frame.
- Remove the two bolts -3- (3.5 Nm) and remove bar -4- and spacer -5- from seat frame.

Protected by copyright. Copying for private or commercial purposes, in part or in whole, is not permitted unless authorised by Volkswagen AG. Volkswagen AG does not guarantee or accept any liability with respect to the correctness of information in this document. Copyright by Volkswagen AG.

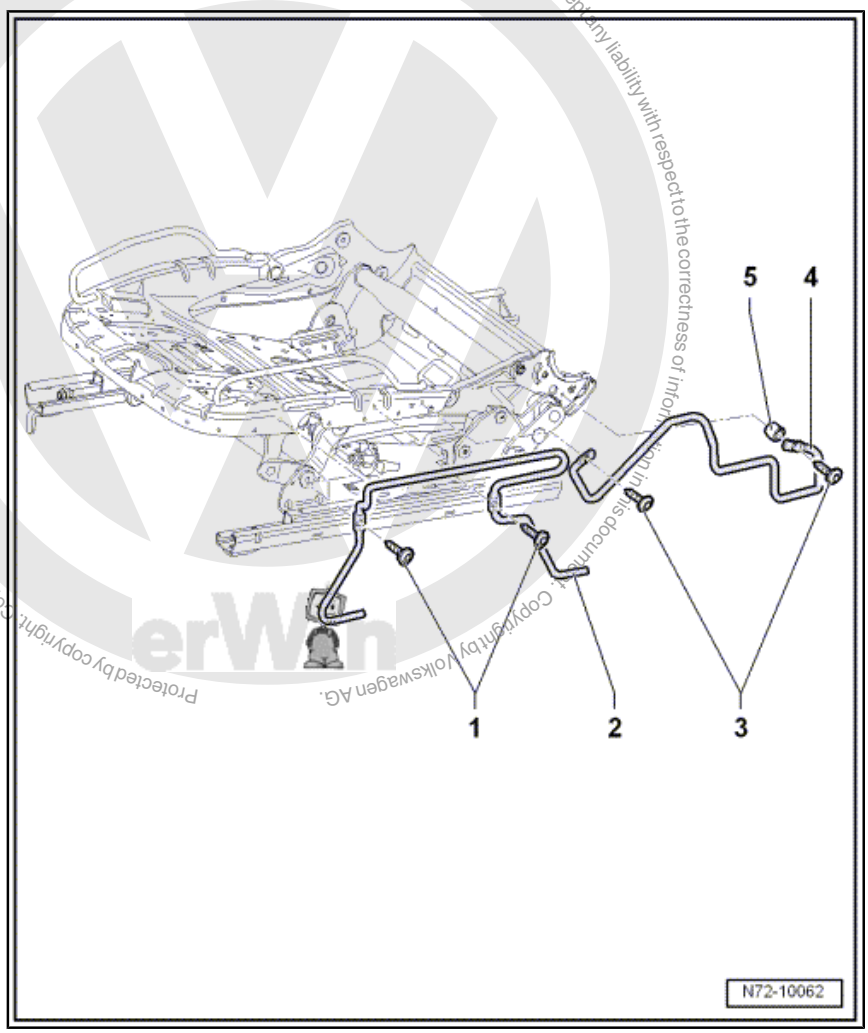

Downloaded from www.Manualslib.com manuals search engine

1.11.2 Installing

– Install in reverse order of removal.

1.12 Removing and installing head restraint guides

1.12.1 Removing

– Operate respective button in head restraint guide and pull head restraint out of backrest.

Caution

Carry out following sequences using extreme care so as not to damage the cover and padding.

– Push cover and padding downwards under the head restraint guide -2-.

– Release retaining lug -1- using a screwdriver or pin and pull head restraint out -2-.

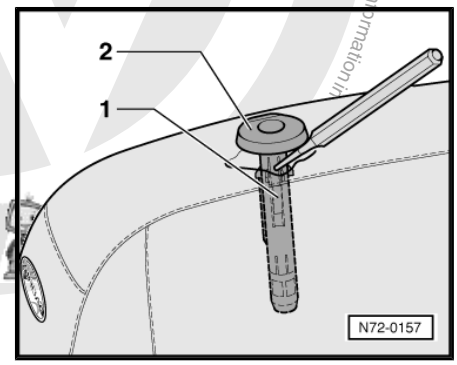

1.12.2 Installing

– Install in reverse order of removal.

1.13 Removing and installing front seat backrest

Note

Removal and installation is described for the left seat. Apply the same instructions for removal and installation of the right seat as appropriate.

1.13.1 Removing

– Attach seat repair stand -VAS 6136- to engine and gearbox support -VAS 6095- .

– Remove front seat ⇒ page 251 .

– Secure seat to seat repair stand -VAS 6136- .

– Remove right trim on seat:

♦ Seat with no folding backrest ⇒ page 257 .

♦ Seat with folding backrest ⇒ page 259 .

Vehicles with manually adjustable seat

– Remove left trim on seat:

♦ Seat with no folding backrest ⇒ page 255 .

Protected by copyright. Copying for private or commercial purposes, in part or in whole, is not permitted unless authorised by Volkswagen AG. Volkswagen AG does not guarantee or accept any liability with respect to the correctness of information in this repair manual.

Downloaded from www.Manualslib.com manuals search engine

- Seat with folding backrest ⇒ page 258 .

Vehicles with electrically adjustable backrest on front passenger seat (USA)

– Remove right trim on seat ⇒ page 260 .

Vehicles with electrically adjustable seat

– Remove left trim on electrically adjustable seat ⇒ page 261 .

All vehicles

– Detach retaining straps for backrest cover from underside of seat frame.

– Disconnect side airbag and seat heating wiring harnesses from seat frame (if part of original equipment).

– Remove two bolts each on left and right -1- and -2- (35 Nm).

Note

- *The bolts are microencapsulated and must be renewed each time they are loosened.*
- *Before new bolts are installed, the threads of the corresponding holes must be cleaned.*

– Remove backrest from seat frame.

Protected by copyright. Copying for private or commercial purposes, in part or in whole, is not permitted unless authorised by Volkswagen AG. Volkswagen AG does not guarantee or accept any liability with respect to the correctness of information in this document. Copyright by Volkswagen AG.

Downloaded from www.Manualslib.com manuals search engine

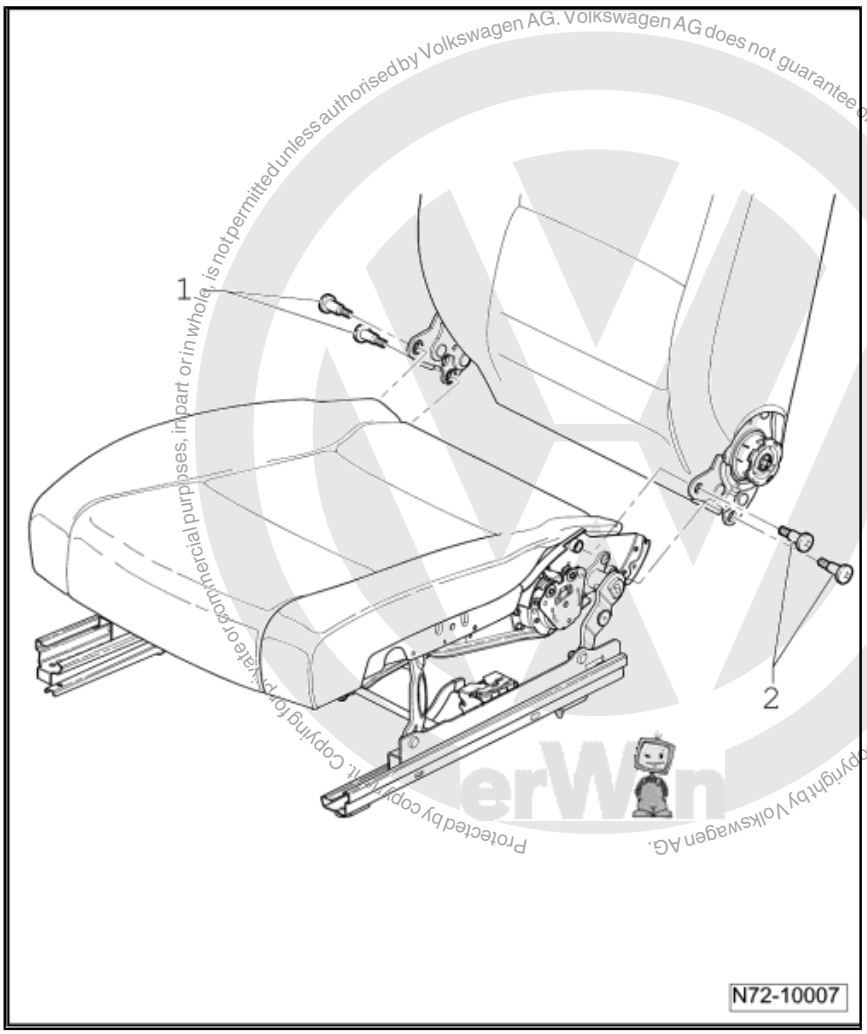

Protected by copyright. Copying for private or commercial purposes, in part or in whole, is not permitted unless authorised by Volkswagen AG. Volkswagen AG does not guarantee or accept any liability with respect to the correctness of information in this document. Copyright by Volkswagen AG.

1.13.2 Installing

– Install in reverse order of removal.

1.14 Removing and installing manually adjustable lumbar support frame (Jetta 2005 ▸, Golf Variant 2007 ▸)

Note

Removal and installation is described for the left seat. Apply the same instructions for removal and installation of the right seat as appropriate.

1.14.1 Removing

– Attach seat repair stand -VAS 6136- to engine and gearbox support -VAS 6095- .

– Remove front seat ⇒ page 251 .

– Secure seat to seat repair stand -VAS 6136- .

– Remove right trim on seat:

Downloaded from www.Manualslib.com manuals search engine

- ♦ Seat with no folding backrest ⇒ page 257 .
- ♦ Seat with folding backrest ⇒ page 259 .

– Remove left trim on seat:

- ♦ Seat with no folding backrest ⇒ page 255 .
- ♦ Seat with folding backrest ⇒ page 258 .

– Remove front seat backrest ⇒ page 268 .

– Secure backrest to seat repair stand -VAS 6136- .

– Remove cover and padding from front seat backrest ⇒ page 294 .

– Remove the two bolts -1- and remove adjustment knob -2- from backrest frame.

– Drill out rivet -3-.

– Unhook both lumbar support frame upper wires -4- from backrest frame.

– Remove lumbar support frame from backrest frame -5-.

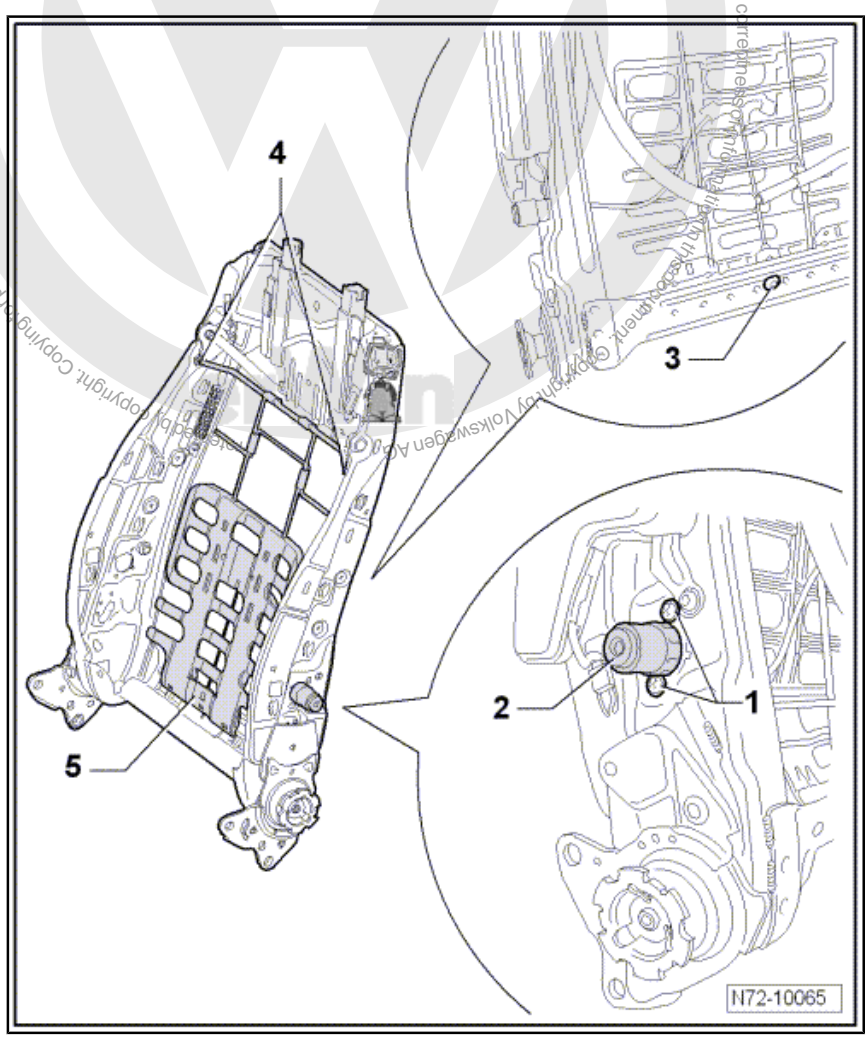

Copyright. Copying for private or commercial purposes, in part or in whole, is not permitted unless authorised by Volkswagen AG. Volkswagen AG does not guarantee or accept any liability with respect to the correctness and completeness of this document. Copyright by Volkswagen AG.

Downloaded from www.Manualslib.com manuals search engine

1.14.2 Installing

– Install in reverse order of removal.

1.15 Removing and installing manually adjustable lumbar support frame (Jetta 2010 ▸, Golf Variant 2010 ▸)

Note

Removal and installation are described for the left vehicle side. Follow same instructions for the right side as appropriate.

Removing

– Attach seat repair stand -VAS 6136- to engine and gearbox support -VAS 6095- .
– Remove front seat ⇒ page 251 .
– Secure seat to seat repair stand -VAS 6136- .
– Remove right side trim on seat ⇒ page 257 .
– Remove left side trim on seat ⇒ page 255 .
– Remove front seat backrest ⇒ page 268 .
– Attach seat repair stand -VAS 6136- to engine and gearbox support -VAS 6095- .
– Remove lumbar adjustment lever ⇒ page 262 .
– Remove cover and padding from front seat backrest ⇒ page 294 .
– Unscrew two actuation mechanism bolts -1- (1.5 ± 1 Nm).
– Unhook lateral fasteners -2- and -3- from backrest frame.
– Unhook lateral springs.
– Release lumbar support -4- from upper mountings -arrows- in backrest frame.

Protected by copyright. Copying for private or commercial purposes, in part or in whole, is not permitted unless authorised by Volkswagen AG. Volkswagen AG does not guarantee or accept any liability with respect to the correctness of information in this document. Copyright by Volkswagen AG.

Downloaded from www.Manualslib.com manuals search engine

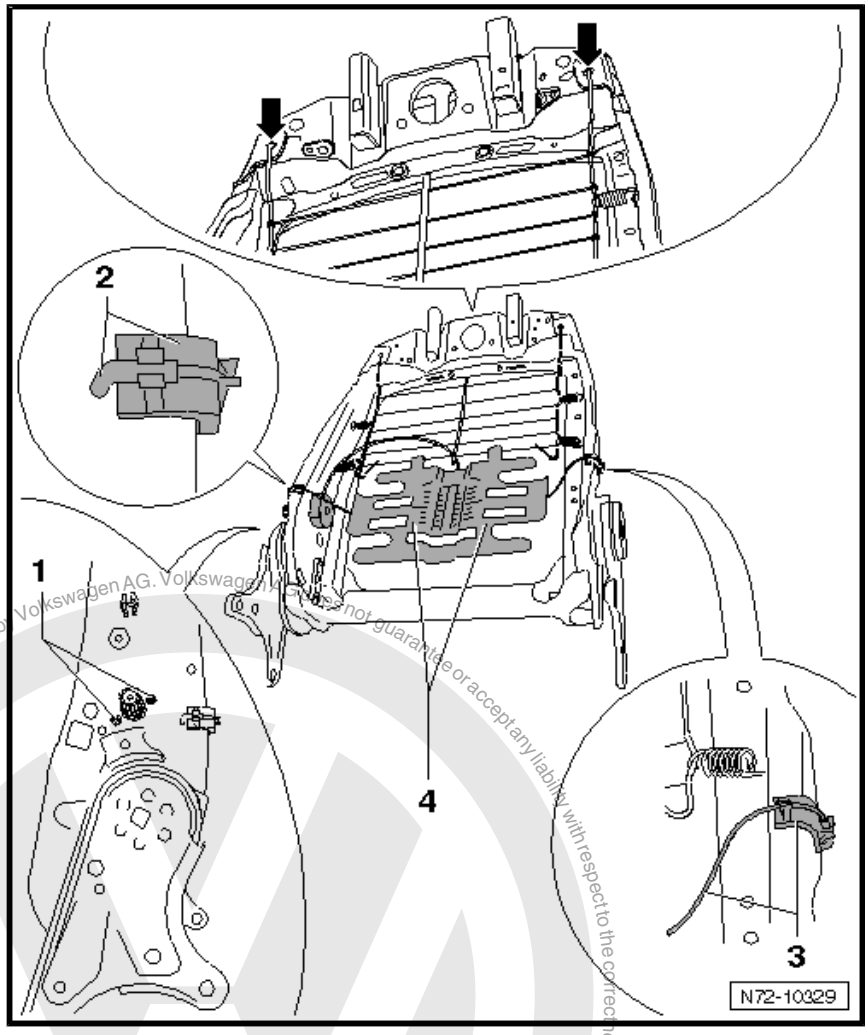

Installing

– Install in reverse order of removal.

1.16 Removing and installing backrest release Bowden cable on front passenger seat with folding backrest

1.16.1 Removing

– Attach seat repair stand -VAS 6136- to engine and gearbox support -VAS 6095- .

– Remove front seat ⇒ page 251 .

– Secure seat to seat repair stand -VAS 6136- .

– Remove left and right trim on folding front passenger seat ⇒ page 258 .

– Release backrest and fold down onto seat cushion.

– Release lower area of front seat backrest cover from seat frame. Cover will not be removed from backrest of front seat.

Copyright by Volkswagen AG. Volkswagen AG does not guarantee or accept any liability with respect to the correctness of information in this document. Copying for private or commercial purposes, in part or in whole, is not permitted unless authorised by Volkswagen AG.

Downloaded from www.Manualslib.com manuals search engine

– Remove support -1- on left side of seat frame. Release retaining tab in direction of -arrow 2- and remove support in direction of -arrow 3-.

– Remove Bowden cable retaining clip -4- from seat frame.

– Unclip Bowden cable from retainer on seat frame.

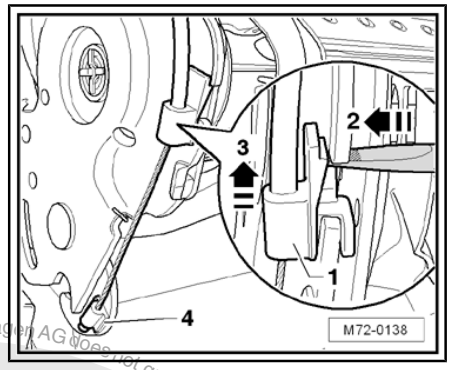

– Unclip support -1- from retainer -2- on right side.

– Slide Bowden cable downwards and remove it from retaining pin -3-.

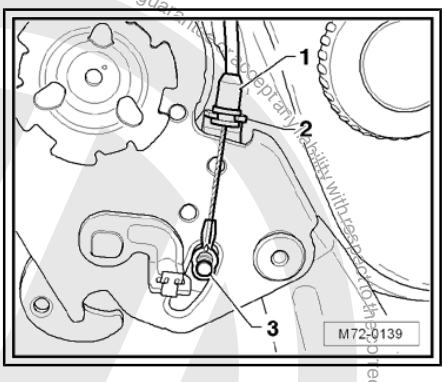

1.16.2 Installing

– Install in reverse order of removal.

1.17 Removing and installing electric longitudinal seat adjustment

Removal and installation of the longitudinal seat adjustment is described for the front left seat frame. Apply the same instructions for removal and installation on the front right seat frame as appropriate.

1.17.1 Removing

– Attach seat repair stand -VAS 6136- to engine and gearbox support -VAS 6095- .

– Remove front seat ⇒ page 251 .

– Secure seat to seat repair stand -VAS 6136- .

– Remove right trim on seat ⇒ page 257 .

– Remove left trim on electrically adjustable seat ⇒ page 261 .

– Remove bar and operating lever on electrically adjustable seat ⇒ page 267 .

– Remove front seat drawer mounting, if part of original equipment ⇒ page 263 .

– Remove front seat backrest ⇒ page 268 .

– Remove front seat cushion cover and padding ⇒ page 291 .

– Unscrew bolts -1- and -2- on right.

– Remove bolt -3- in rear area.

Protected by copyright. Copying of this document, in part or in whole, is not permitted unless authorised by Volkswagen AG. Volkswagen AG does not guarantee or accept any liability with respect to the correctness of information in this document. Copyright by Volkswagen AG.

Downloaded from www.Manualslib.com manuals search engine

Note

Bolt -3- points from inside out when installed.

– Remove bolt -4- in front area.
– Release seat pan -5- from longitudinal seat adjustment -6-.

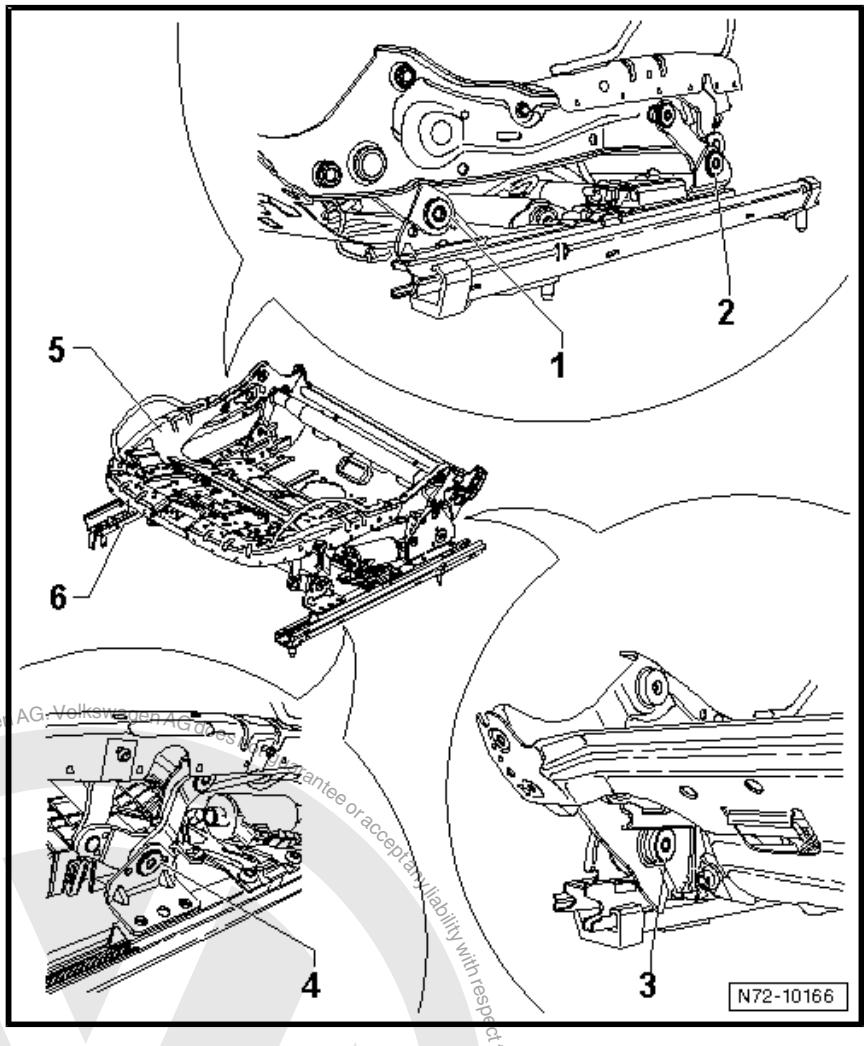

1.17.2 Installing

– Install in reverse order of removal.

1.18 Removing and installing seat pan on electrically adjustable seat

Removal and installation of the seat pan is described for the front left seat frame. Apply the same instructions for removal and installation of the seat pan of the front right seat frame as appropriate.

Protected by copyright. Copying for private or commercial purposes, in part or in whole, is not permitted unless authorised by Volkswagen AG. Volkswagen AG does not guarantee or accept any liability with respect to the correctness of information in this document. Copyright by Volkswagen AG.

Downloaded from www.Manualslib.com manuals search engine

Protected by copyright. Copying for private or commercial purposes, in part or in whole, not permitted unless authorised by Volkswagen AG. Volkswagen AG does not guarantee or accept any liability with respect to the correctness of information in this document. Copyright by Volkswagen AG.

1.18.1 Removing

- Attach seat repair stand -VAS 6136- to engine and gearbox support -VAS 6095- .
- Remove front seat ⇒ page 251 .
- Secure seat to seat repair stand -VAS 6136- .
- Remove right trim on seat ⇒ page 257 .
- Remove left trim on electrically adjustable seat ⇒ page 261 .
- Remove bar and operating lever on electrically adjustable seat ⇒ page 267 .
- Remove front seat drawer mounting, if part of original equipment ⇒ page 263 .
- Remove front seat backrest ⇒ page 268 .
- Remove front seat cushion cover and padding ⇒ page 291 .
- Unscrew bolts -1- and -2- on right.
- Remove bolt -3- in rear area.

Note

Bolt -3- points from inside out when installed.

- Remove bolt -4- in front area.
- Release seat pan -5- from longitudinal seat adjustment -6-.

Downloaded from www.Manualslib.com manuals search engine

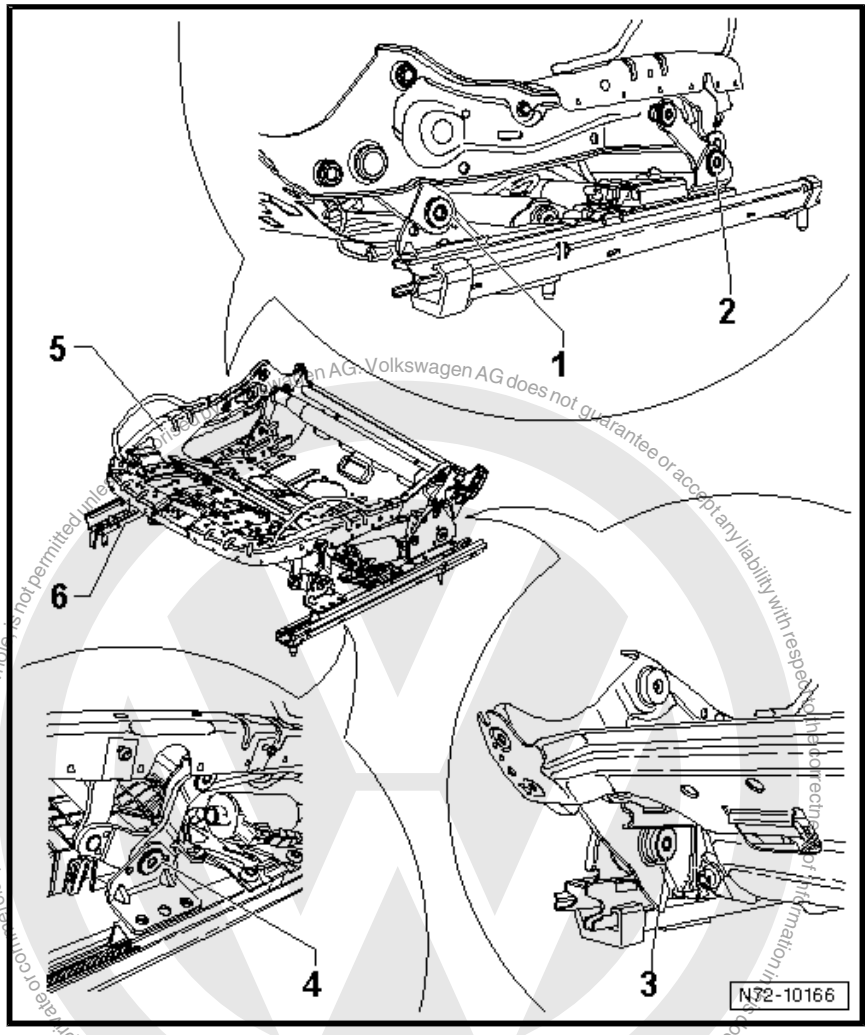

1.18.2 Installing

– Install in reverse order of removal.

If seat pan currently fitted is to be renewed, the replacement part is a seat pan with bars -1- and -2-. If the bars -1- and -2- are not part of the equipment on the original seats installed, then the bars must be removed from the replacement seat pan.

Downloaded from www.Manualslib.com manuals search engine

In order to prevent soiling, seat rails -3- and -4- must be covered with a cloth when removing bars -1- and -2-!

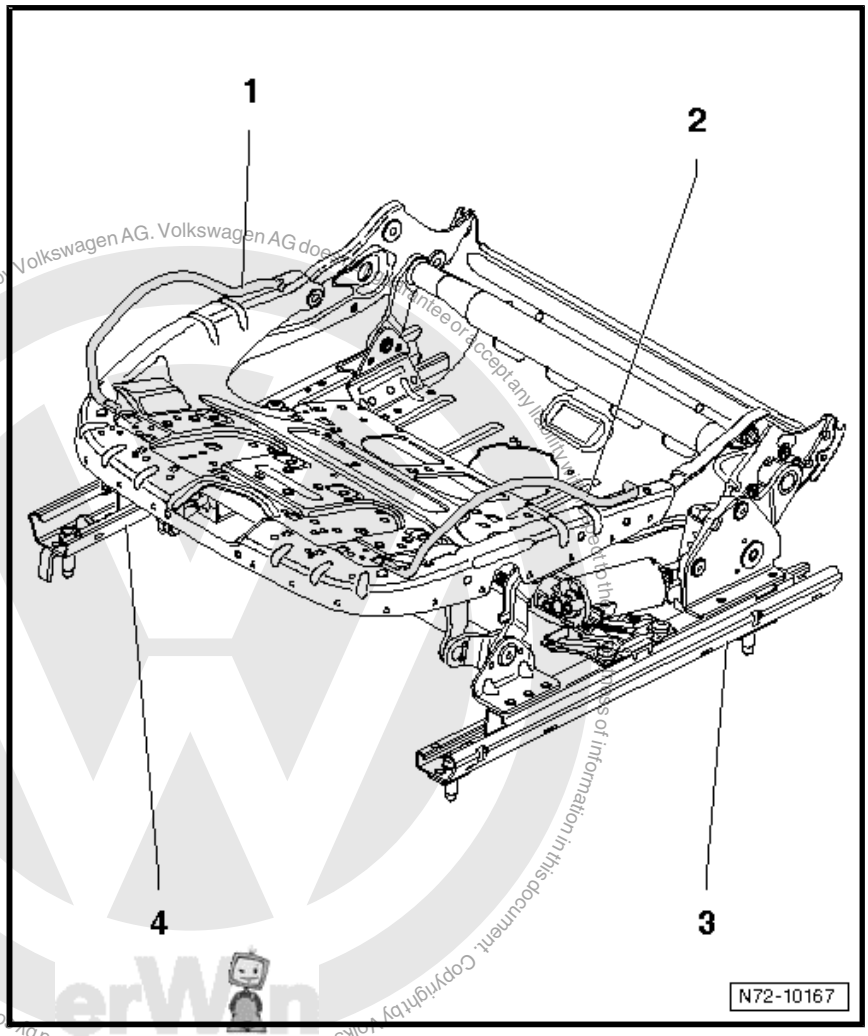

1.19 Removing and installing rake adjustment on electrically adjustable seat

Removal and installation of the rake adjustment is described for the front left seat frame. Apply the same instructions for removal and installation of the rake adjustment on the front right seat frame as appropriate.

1.19.1 Removing

- Attach seat repair stand -VAS 6136- to engine and gearbox support -VAS 6095- .
- Remove front seat ⇒ page 251 .
- Secure seat to seat repair stand -VAS 6136- .
- Remove right trim on seat ⇒ page 257 .
- Remove left trim on electrically adjustable seat ⇒ page 261 .
- Remove bar and operating lever on electrically adjustable seat ⇒ page 267 .

Downloaded from www.Manualslib.com manuals search engine

– Remove front seat drawer mounting, if part of original equipment ⇒ page 263 .
– Remove front seat backrest ⇒ page 268 .
– Remove front seat cushion cover and padding ⇒ page 291 .
– Separate wiring harness -1- from rake adjustment -2-.
– Remove bolt -3-.
– Remove bolts -4- and -5-.
– Detach rake adjustment -2- from seat frame.

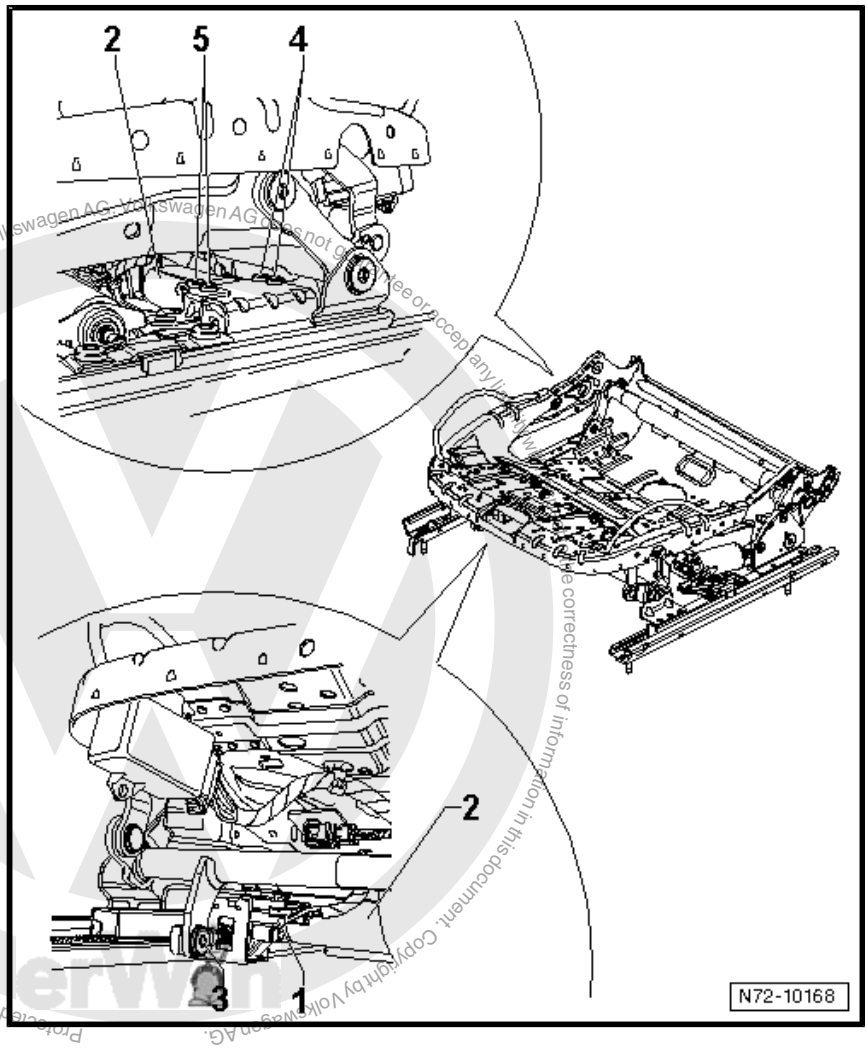

Protected by copyright. Copying for private or commercial purposes, in part or in whole, is not permitted unless authorised by Volkswagen AG. Volkswagen AG does not guarantee or accept any liability with respect to the correctness of information in this document. Copyright by Volkswagen AG.

1.19.2 Installing

– Install in reverse order of removal.

1.20 Removing and installing height adjustment on electrically adjustable seat

Removal and installation of the seat height adjustment is described for the front left seat frame. Apply the same instructions for removal and installation of the height adjustment on the front right seat frame as appropriate.

Downloaded from www.Manualslib.com manuals search engine

1.20.1 Removing

- Attach seat repair stand -VAS 6136- to engine and gearbox support -VAS 6095- .
- Remove front seat ⇒ page 251 .
- Secure seat to seat repair stand -VAS 6136- .
- Remove right trim on seat ⇒ page 257 .
- Remove left trim on electrically adjustable seat ⇒ page 261 .
- Remove bar and operating lever on electrically adjustable seat ⇒ page 267 .
- Remove front seat drawer mounting, if part of original equipment ⇒ page 263 .
- Remove front seat backrest ⇒ page 268 .
- Remove front seat cushion cover and padding ⇒ page 291 .
- Unscrew bolt -1- in rear area from seat frame.

Note

Bolt -1- points from inside out when installed.

- Separate wiring harness -2- from height adjustment -3-.
- Remove the two bolts -4-.
- Detach height adjustment -3- from mountings in seat frame.

Protected by copyright. Copying for private or commercial purposes, in part or in whole, is not permitted unless authorised by Volkswagen AG. Volkswagen AG does not guarantee or accept any liability with respect to the correctness of information in this document. Copyright by Volkswagen AG.

Downloaded from www.Manualslib.com manuals search engine

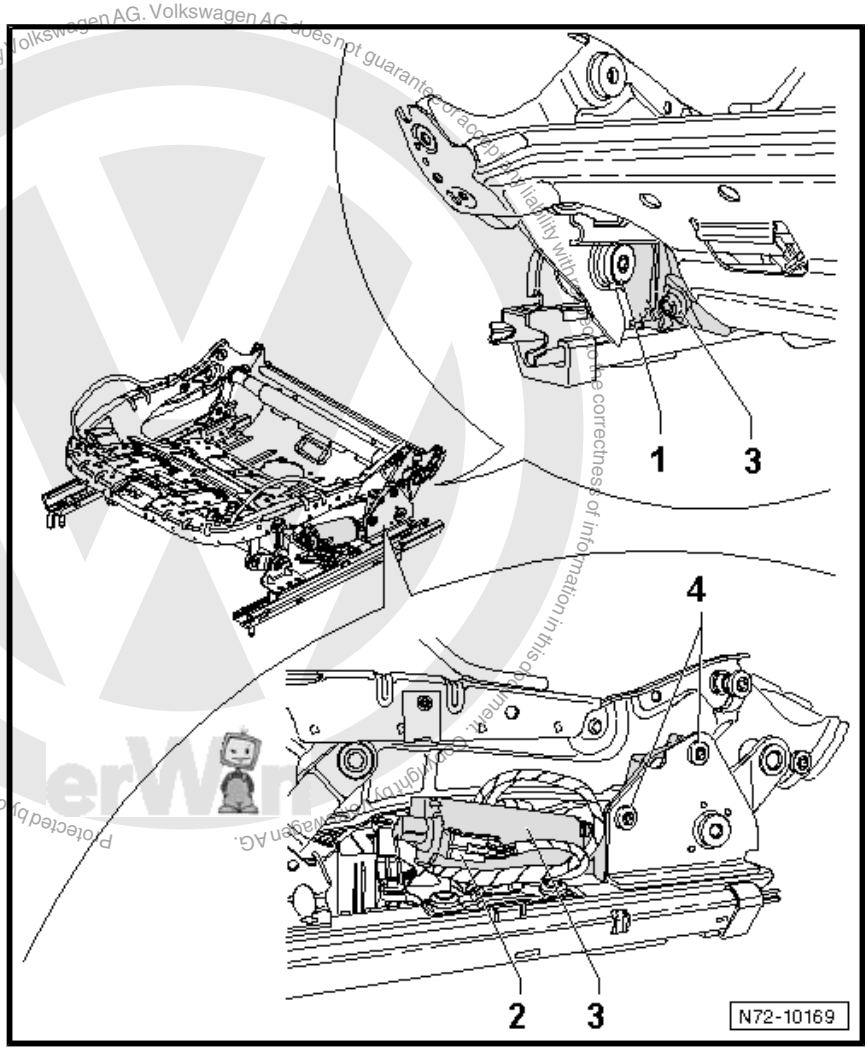

1.20.2 Installing

– Install in reverse order of removal.

1.21 Removing and installing lumbar support on electrically adjustable seat

Removal and installation of the lumbar support is described for the left backrest frame. Removal and installation of the lumbar support on the right backrest frame is similar.

> ⚠ **WARNING**
>
> *Observe the general safety regulations when working on air-bag, belt tensioner and battery isolator units (pyrotechnic components)* ⇒ page 89

– Attach seat repair stand -VAS 6136- to engine and gearbox support -VAS 6095- .

– Remove front seat ⇒ page 251 .

– Secure seat to seat repair stand -VAS 6136- .

– Remove right trim on seat ⇒ page 257 .

Downloaded from www.Manualslib.com manuals search engine

- Remove left trim on electrically adjustable seat ⇒ page 261 .
- Remove front seat backrest ⇒ page 268 .
- Secure backrest to seat repair stand -VAS 6136- .
- Remove cover and padding from front seat backrest ⇒ page 294 .
- Remove front side-airbag ⇒ page 135 .
- Disconnect wiring harnesses from drive motors -1- and -2-.
- Drill out rivet -3- on underside from rear.
- Drill out the two rivets -4- on left side.
- Drill out the two rivets -5- on right side.
- Unhook lumbar support from mountings in backrest frame -arrows-.
- Detach components of lumbar support from backrest frame.

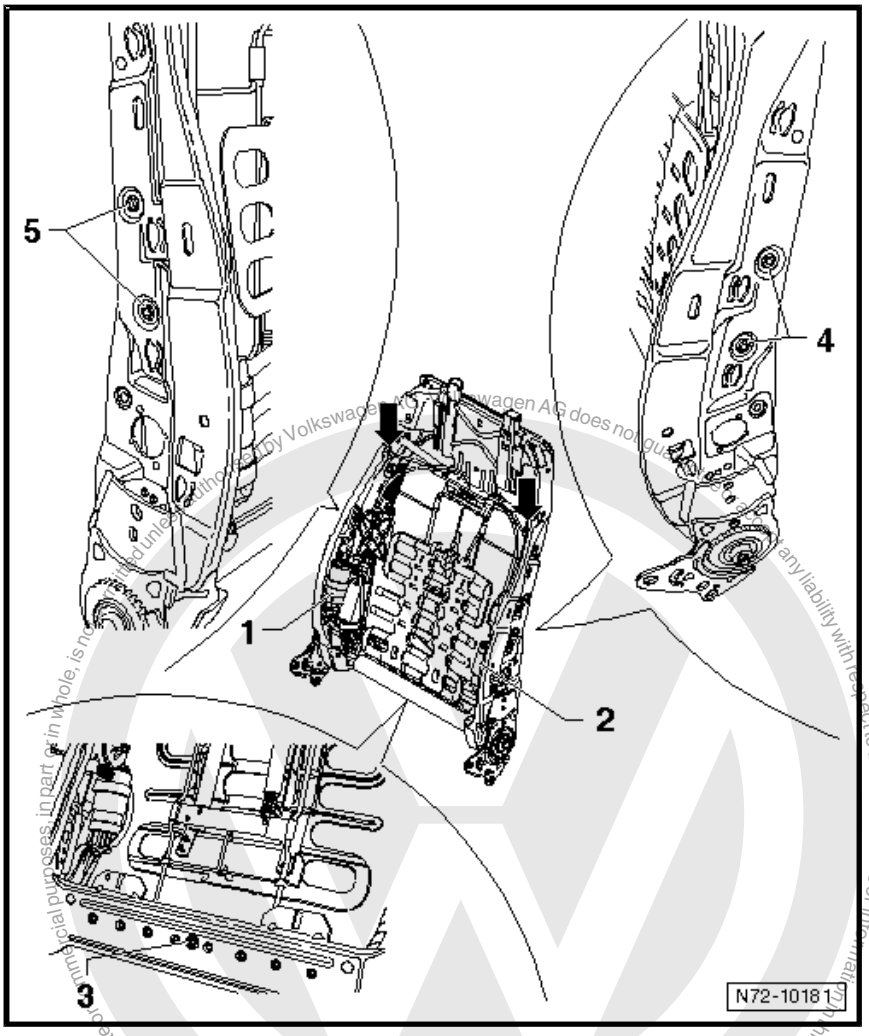

1.21.1 Installing

- Install in reverse order of removal.

Downloaded from www.Manualslib.com manuals search engine

To install rivets -3-, -4- and -5-, use pop rivet pliers -VAS 5072- .

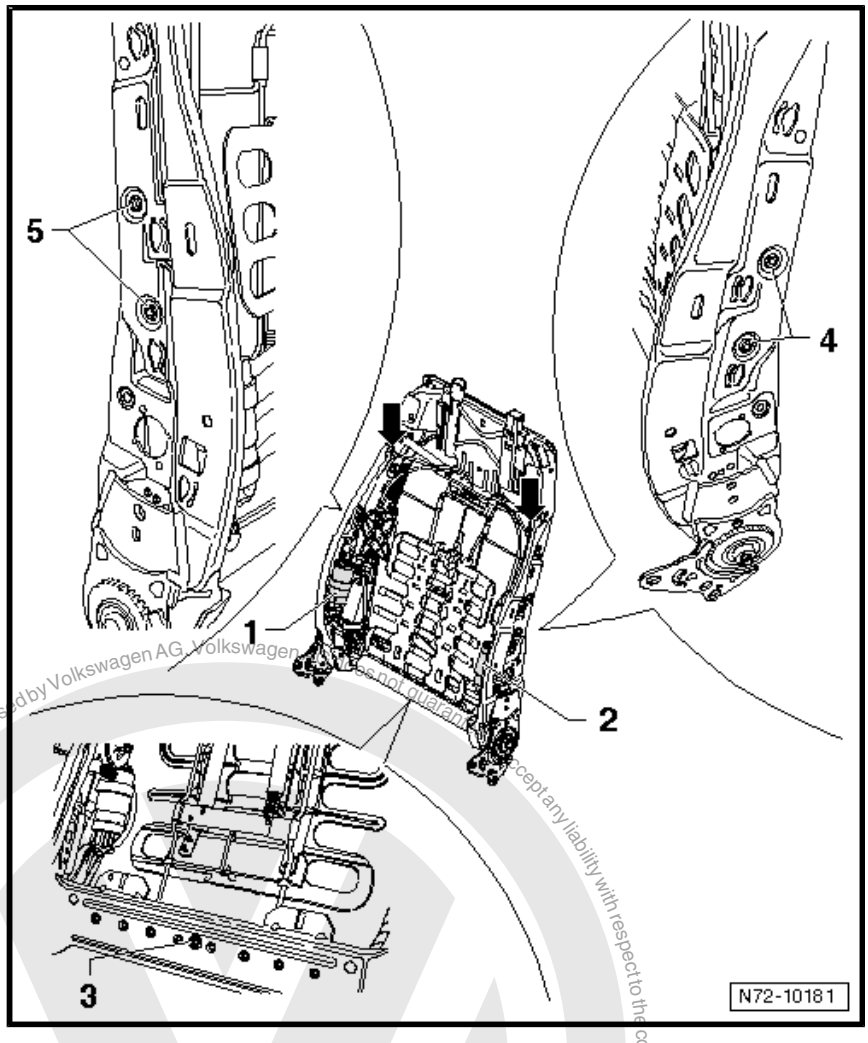

1.22 Removing and installing drive for (electric) backrest adjustment

In event of defective backrest adjustment drive, backrest frame must be renewed.

Protected by copyright. Copying for private or commercial purposes, in part or in whole, is not permitted unless authorised by Volkswagen AG. Volkswagen AG does not guarantee or accept any liability with respect to the correctness of information in this document. Copyright by Volkswagen AG.

Downloaded from www.Manualslib.com manuals search engine

2 Rear seats

2.1 Removing and installing bench seat (saloon)

– Unclip the four guides -1- from child seat anchorages -2-.
– Pull front section of bench seat -3- upwards out of the two mountings -4- -arrows A-.
– Push bench seat to rear -arrow B-.
– Pull rear section of bench seat upwards.
– Remove bench seat from vehicle.

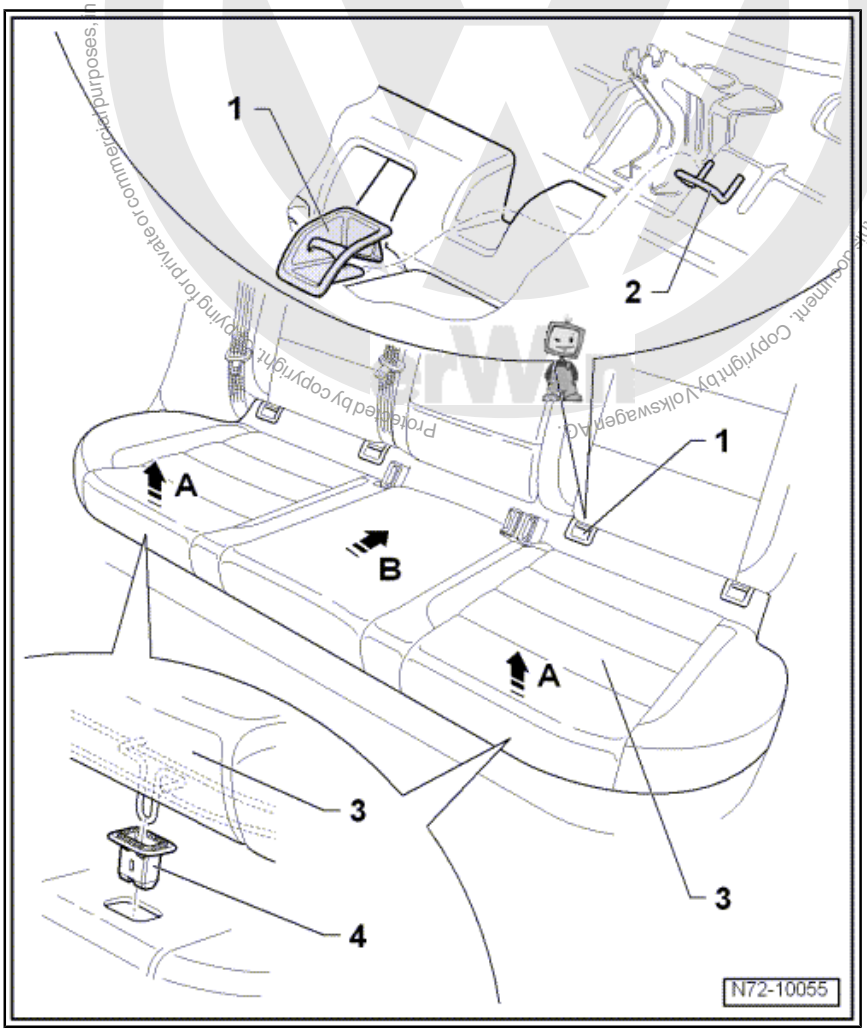

2.1.1 Installing

– Install in reverse order of removal.

2.2 Removing and installing bench seat (Variant)

– Fold left bench seat -2- forwards.
– Fold right bench seat -3- forwards.

Downloaded from www.Manualslib.com manuals search engine

– Press the two seat frame hooks -5- out of the hinges -4-.
– Remove bench seat from vehicle.

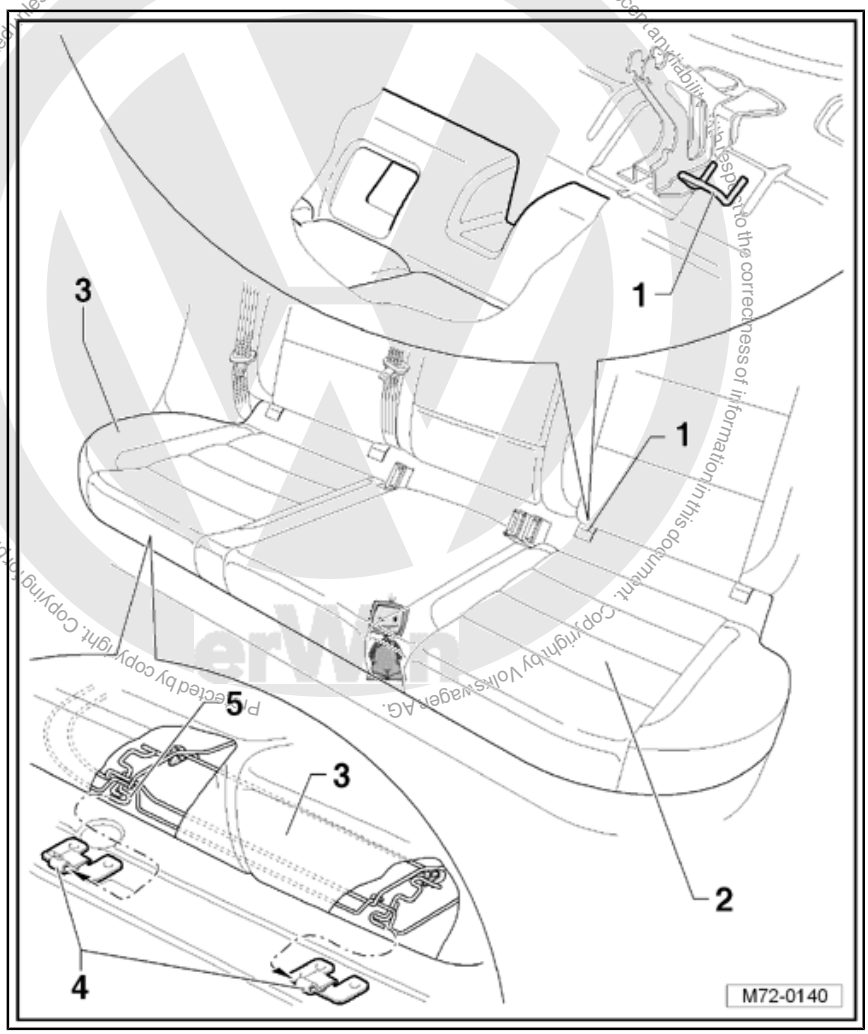

2.2.1 Installing

– Install in reverse order of removal.

2.3 Removing and installing backrest

2.3.1 Removing

Saloon

– Remove bench seat ⇒ page 284 .

Variant

– Fold bench seat forwards.

All vehicles

– Fold back floor covering in area of backrest centre mounting -4-.

Downloaded from www.Manualslib.com manuals search engine

– Remove trim -1- from backrest centre mounting, if part of original equipment.
– Remove bolt -2- (9 Nm).
– Release clamp -3- from backrest centre mounting.
– Lift right-hand backrest -5- out of backrest centre mounting and pull backrest off pin -6-.
– Remove bolt -8- (40 Nm) and remove belt buckle -9- from floor.
– Remove right-hand backrest from vehicle.
– Lift left-hand backrest -7- out of backrest centre mounting and pull backrest off pin.

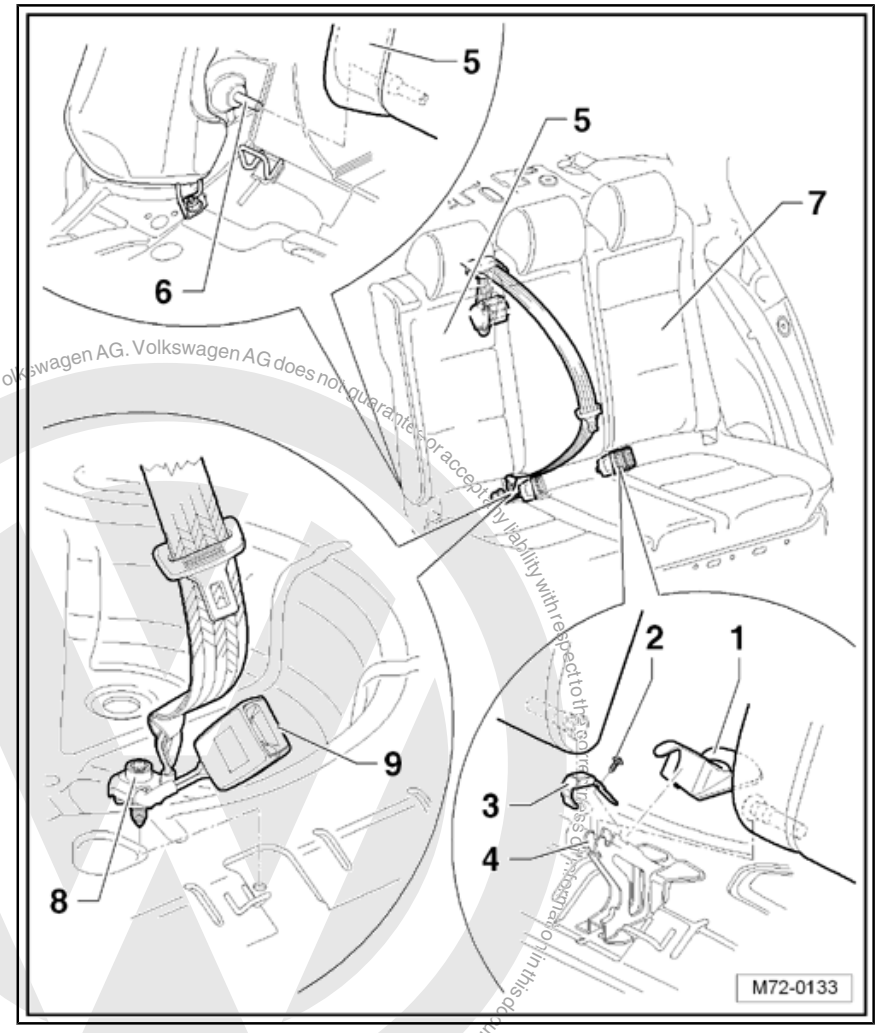

2.3.2 Installing

– Install in reverse order of removal.

Protected copyright. Copying for private or commercial purposes, in part or in whole, is not permitted unless authorised by Volkswagen AG. Volkswagen AG does not guarantee or accept any liability with respect to the correctness and completeness of information in this document. Copyright by Volkswagen AG.

Downloaded from www.Manualslib.com manuals search engine

2.4 Removing and installing side padding with side airbag

Note

Removal and installation is described for the right-hand side padding. Follow same instructions for left side padding as appropriate.

2.4.1 Removing

WARNING

Observe the general safety regulations when working on airbag, belt tensioner and battery isolator units (pyrotechnic components) ⇒ page 111 .

– Disconnect vehicle battery ⇒ Electrical system; Rep. Gr. 27 ; Disconnecting and reconnecting battery .

Saloon

– Remove bench seat ⇒ page 284 .

Variant

– Fold bench seat forwards.

All vehicles

– Remove nut -1- (8 Nm).

– Fold backrest forwards.

– Remove cover cap and remove bolt -2- (8 Nm), if part of original equipment.

– Pull side padding -5- upwards out of mountings -3- and -4- in body.

WARNING

Electrostatic discharges may result in unintentional triggering of airbag. Therefore, the mechanic must electrostatically discharge him/herself before disconnecting wiring. This can be done by briefly touching the body or striker plate of the door.

– Disconnect wiring harness from rear side-airbag.

Protected by copyright. Copying for private or commercial purposes, in part or in whole, is not permitted unless authorised by Volkswagen AG. Volkswagen AG does not guarantee or accept any liability with respect to the correctness of information in this document. Copyright by Volkswagen AG.

Downloaded from www.Manualslib.com manuals search engine

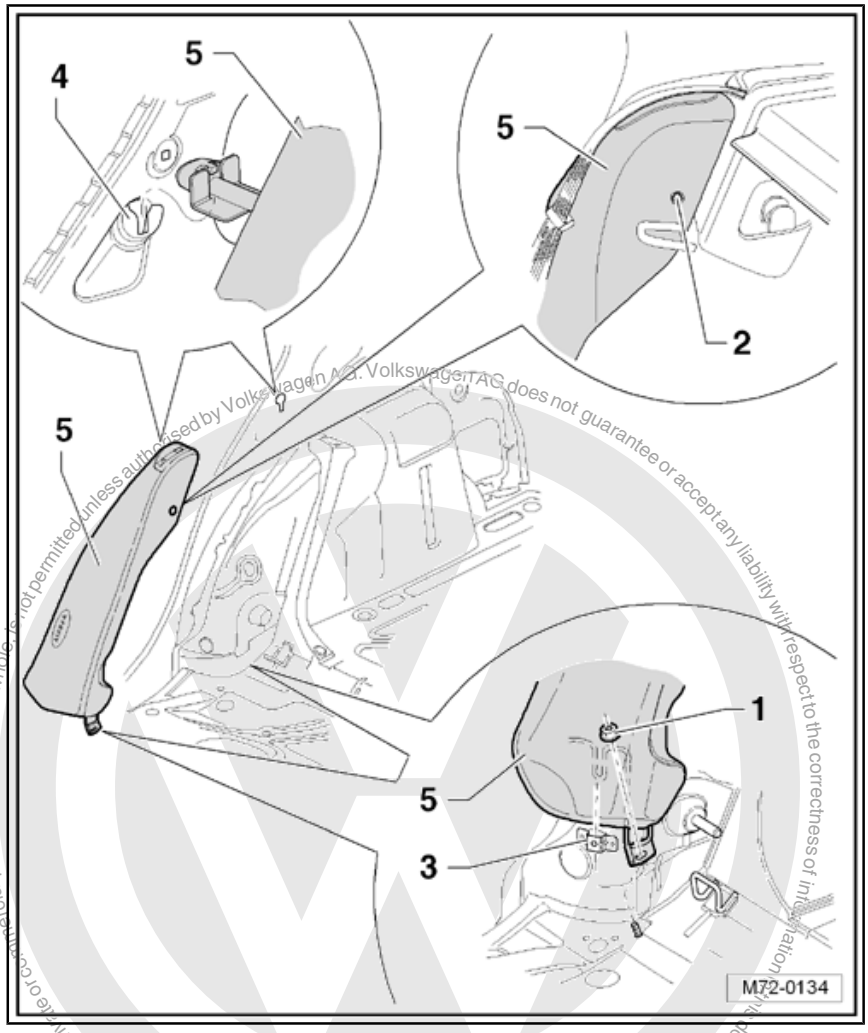

Protected by copyright. Copying for private or commercial purposes, in part or in whole, is not permitted unless authorised by Volkswagen AG. Volkswagen AG does not guarantee or accept any liability with respect to the correctness of information in this document. Copyright by Volkswagen AG.

2.4.2 Installing

– Install in reverse order of removal.
– Switch ignition on.

> ⚠ **WARNING**
>
> ***Ensure that nobody is in vehicle.***

– Reconnect vehicle battery ⇒ Electrical system; Rep. Gr. 27 ; Disconnecting and reconnecting battery .

2.5 Removing and installing side padding with no side-airbag

Note

Removal and installation is described for the right-hand side padding. Follow same instructions for left side padding as appropriate.

Downloaded from www.Manualslib.com manuals search engine

2.5.1 Removing

Saloon

– Remove bench seat ⇒ page 284 .

Variant

– Fold bench seat forwards.

All vehicles

– Remove nut -1- (8 Nm).

– Fold backrest forwards.

– Pull side padding -4- upwards out of mountings -2- and -3- in body.

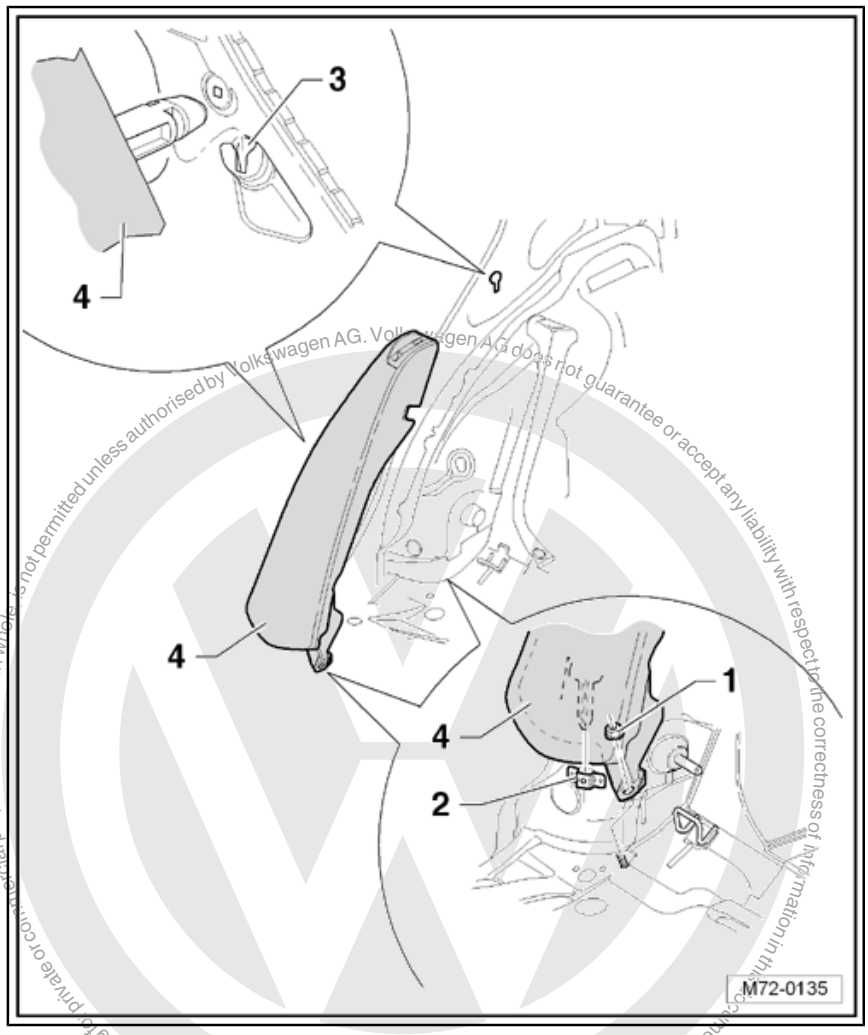

2.5.2 Installing

– Install in reverse order of removal.

Protected by copyright. Copying for private or commercial purposes, in part or in whole, is not permitted unless authorised by Volkswagen AG. Volkswagen AG does not guarantee or accept any liability with respect to the correctness of information in this document. Copyright by Volkswagen AG.

Downloaded from www.Manualslib.com manuals search engine

74 – Seat - padding, covers

1 Front seat covers and padding

1.1 Tools

Special tools and workshop equipment required

- Removal pliers -3392-

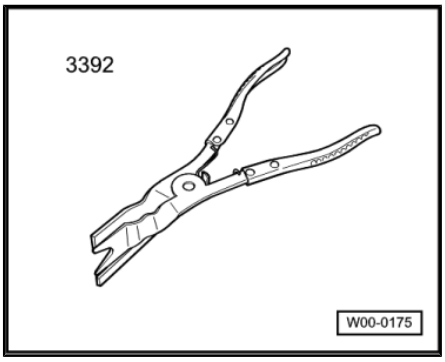

- Engine and gearbox support -VAS 6095-

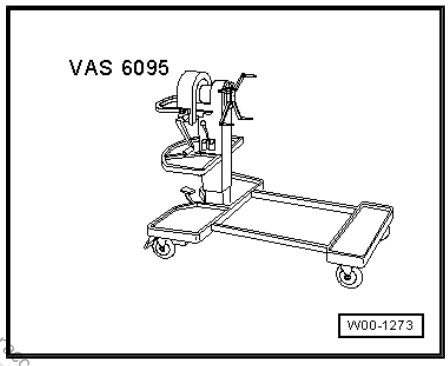

- Seat repair stand -VAS 6136-

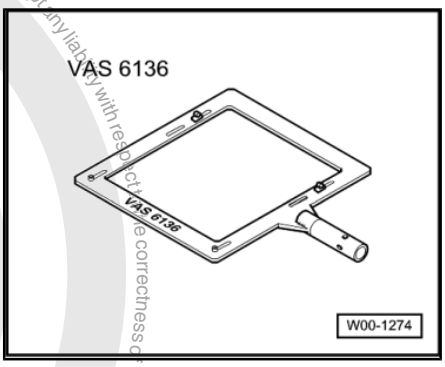

Protected by copyright. Copying for private or commercial purposes, in part or in whole, is not permitted unless authorised by Volkswagen AG. Volkswagen AG does not guarantee or accept any liability with respect to the correctness of information in this document. Copyright by Volkswagen AG.

Downloaded from www.Manualslib.com manuals search engine

- Upholstery clip pliers -V.A.G 1634-

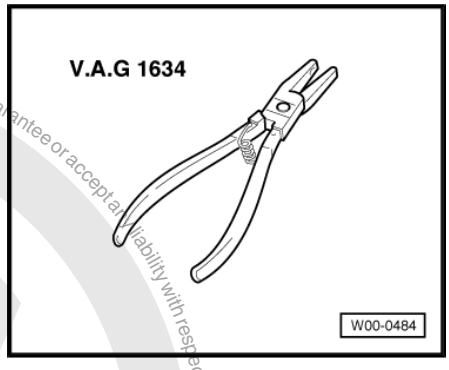

1.2 Removing and installing front seat cushion cover and padding

Note

Removal and installation is described for the left seat. Apply the same instructions for removal and installation of right seat components as appropriate.

WARNING

If the front passenger seat cushion padding is renewed, the seat occupied sensor, front passenger side -G128- must also always be renewed ⇒ page 142 .

1.2.1 Removing

– Attach seat repair stand -VAS 6136- to engine and gearbox support -VAS 6095- .

– Remove front seat ⇒ page 251 .

– Secure seat to seat repair stand -VAS 6136- .

– Remove right trim on seat:

- Seat with no folding backrest ⇒ page 257 .
- Seat with folding backrest ⇒ page 259 .

Vehicles with manually adjustable seat

– Remove left trim on seat:

- Seat with no folding backrest ⇒ page 255 .
- Seat with folding backrest ⇒ page 258 .

– Remove bar and operating lever for front seat ⇒ page 265 .

Vehicles with electrically adjustable backrest on front passenger seat (USA)

– Remove right trim on seat ⇒ page 260 .

– Remove bar and operating lever for electrically adjustable backrest on front seat ⇒ page 266 .

Vehicles with electrically adjustable seat

– Remove left trim on electrically adjustable seat ⇒ page 261 .

Protected by copyright. Copying for private or commercial purposes, in part or in whole, is not permitted unless authorised by Volkswagen AG. Volkswagen AG does not guarantee or accept any liability with respect to the correctness of information in this document. Copyright by Volkswagen AG.

Downloaded from www.Manualslib.com manuals search engine

– Remove bar and operating lever on electrically adjustable seat ⇒ page 267 .

All vehicles

– Remove seat drawer mounting, if part of original equipment ⇒ page 263 .

– Remove front seat backrest ⇒ page 268 .

– Release profile -1- from mounting.

– Unhook retaining straps -2- on both sides of seat.

– Release profiles -3- from mountings on both sides of seat.

– Release profile -4- from mounting on front of seat.

– Roll up cover on outer sides working around perimeter.

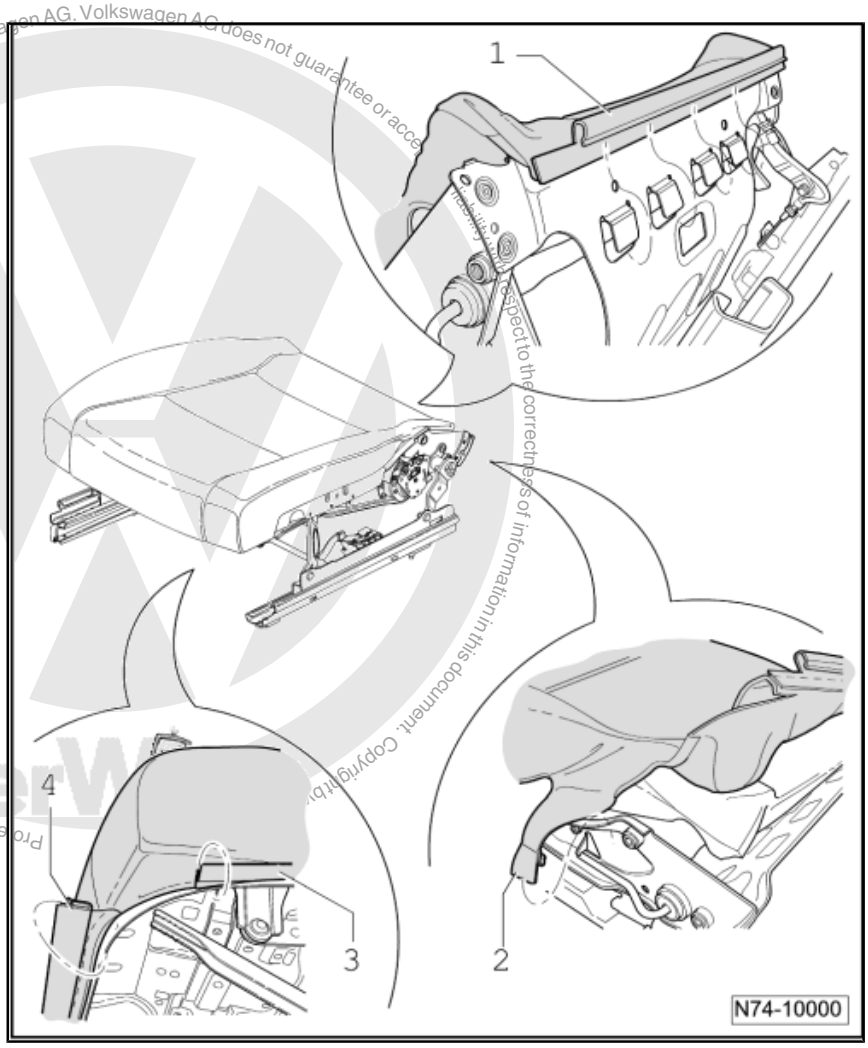

Protected by copyright. Copying for private or commercial purposes, in part or in whole, is not permitted unless authorised by Volkswagen AG. Volkswagen AG does not guarantee or accept any liability with respect to the correctness of information in this document. Copyright by

– Using a small screwdriver, unclip cover profile -1- from mountings -2- in padding.

– If vehicle is equipped with seat heating, disconnect wiring harness -3- from seat frame.

Vehicles with seat occupied recognition

– Remove cover -4- from padding -5- and seat frame -6-.

Downloaded from www.Manualslib.com manuals search engine

– Remove front seat cushion padding -5- with components for seat occupied recognition ⇒ page 150 .

Caution

The front seat cushion padding, the mat for the seat occupied recognition, the pressure hose, the pressure sensor for seat occupied recognition -G452- and the seat occupied recognition control unit -J706- may not be disconnected.

Vehicles with no seat occupied recognition

– Remove cover -4- and padding -5- from seat frame -6-.

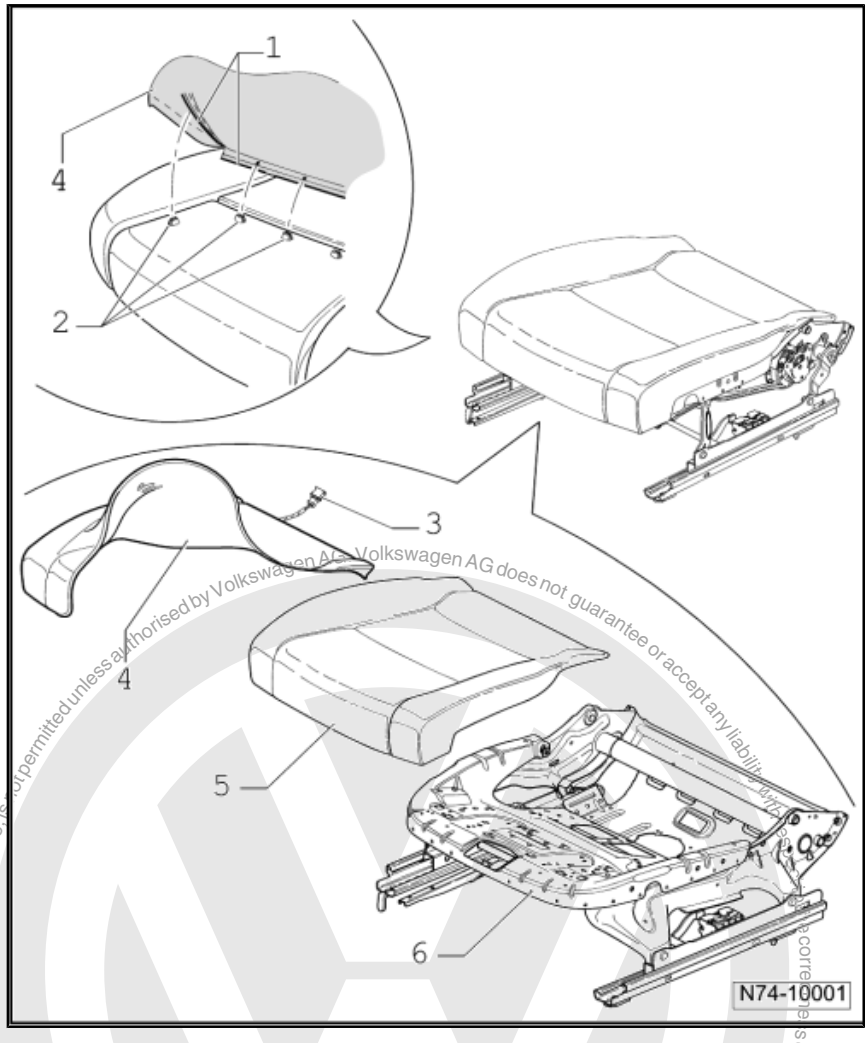

1.2.2 Installing

– Install in reverse order of removal.

Protected by copyright. Copying for private or commercial purposes, in part or in whole, is not permitted unless authorised by Volkswagen AG. Volkswagen AG does not guarantee or accept any liability with respect to the correctness of information in this document. Copyright by Volkswagen AG.

Downloaded from www.Manualslib.com manuals search engine

1.3 Removing and installing front seat backrest cover and padding

Note

Removal and installation is described for the left seat. Apply the same instructions for removal and installation of right seat components as appropriate.

1.3.1 Removing

– Attach seat repair stand -VAS 6136- to engine and gearbox support -VAS 6095- .

– Remove front seat ⇒ page 251 .

– Secure seat to seat repair stand -VAS 6136- .

– Remove right trim on seat:

♦ Seat with no folding backrest ⇒ page 257 .

♦ Seat with folding backrest ⇒ page 259 .

Vehicles with manually adjustable seat

– Remove left trim on seat:

♦ Seat with no folding backrest ⇒ page 255 .

♦ Seat with folding backrest ⇒ page 258 .

Vehicles with electrically adjustable backrest on front passenger seat (USA)

– Remove right trim on seat ⇒ page 260 .

Vehicles with electrically adjustable seat

– Remove left trim on electrically adjustable seat ⇒ page 261 .

All vehicles

– Remove front seat backrest ⇒ page 268 .

– Secure backrest to seat repair stand -VAS 6136- .

– Operate button in head restraint guide and pull head restraint -2- out of backrest.

– Remove head restraint guides -1- and -3- ⇒ page 268 .

Vehicles with manually operated lumbar support adjustment only

– Using removal pliers -3392- , remove knob -4- for lumbar support adjustment.

All vehicles

– Unhook profile -5- on both sides of backrest.

– Release profile -6- from mounting -7-.

Protected by copyright. Copying for private or commercial purposes, in part or in whole, is not permitted unless authorised by Volkswagen AG. Volkswagen AG does not guarantee or accept any liability with respect to the correctness of information in this document. Copyright by Volkswagen AG.

Downloaded from www.Manualslib.com manuals search engine

Protected by copyright. Copying for private or commercial purposes, in part or in whole, is not permitted unless authorised by Volkswagen AG. Volkswagen AG does not guarantee or accept any liability with respect to the correctness of information in this document. Copyright by Volkswagen AG.

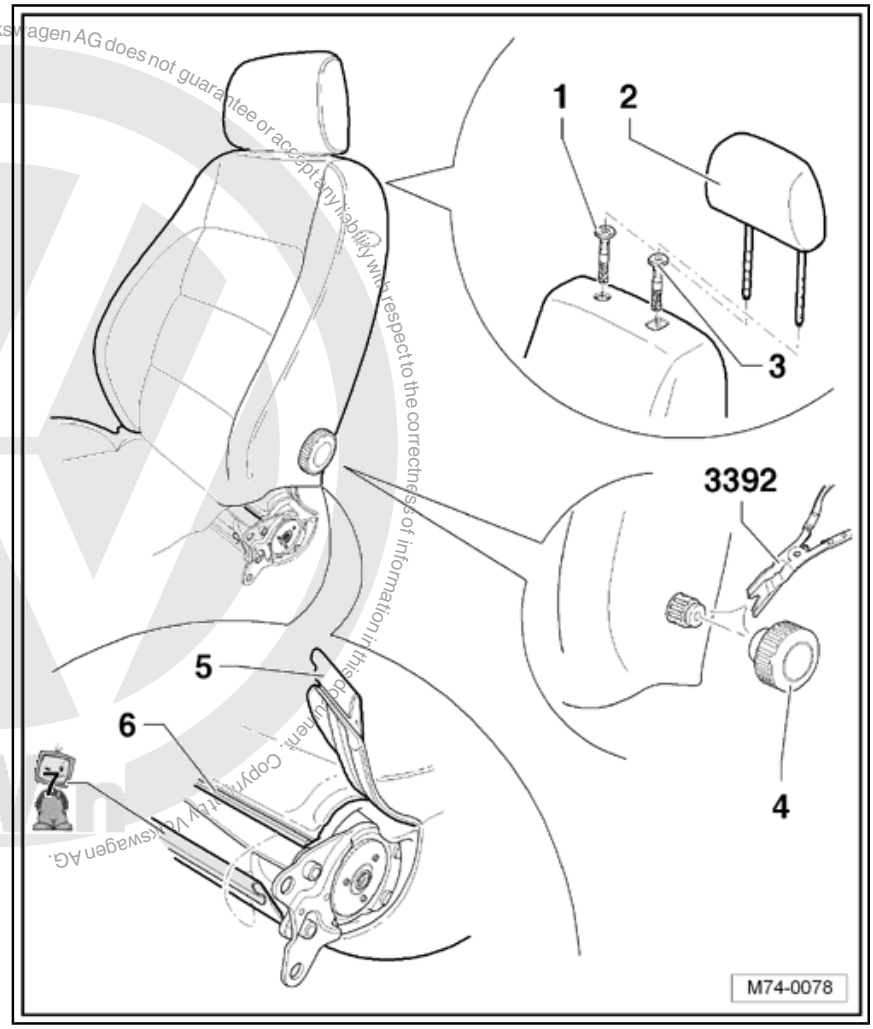

- Unhook left and right tensioning wire -1- from backrest frame.
- Release left and right profiles -2- from mountings -3-.
- Pull backrest cover upwards.
- Using a small screwdriver, unclip backrest cover profile -4- from mountings -5- in padding.

Downloaded from www.Manualslib.com manuals search engine

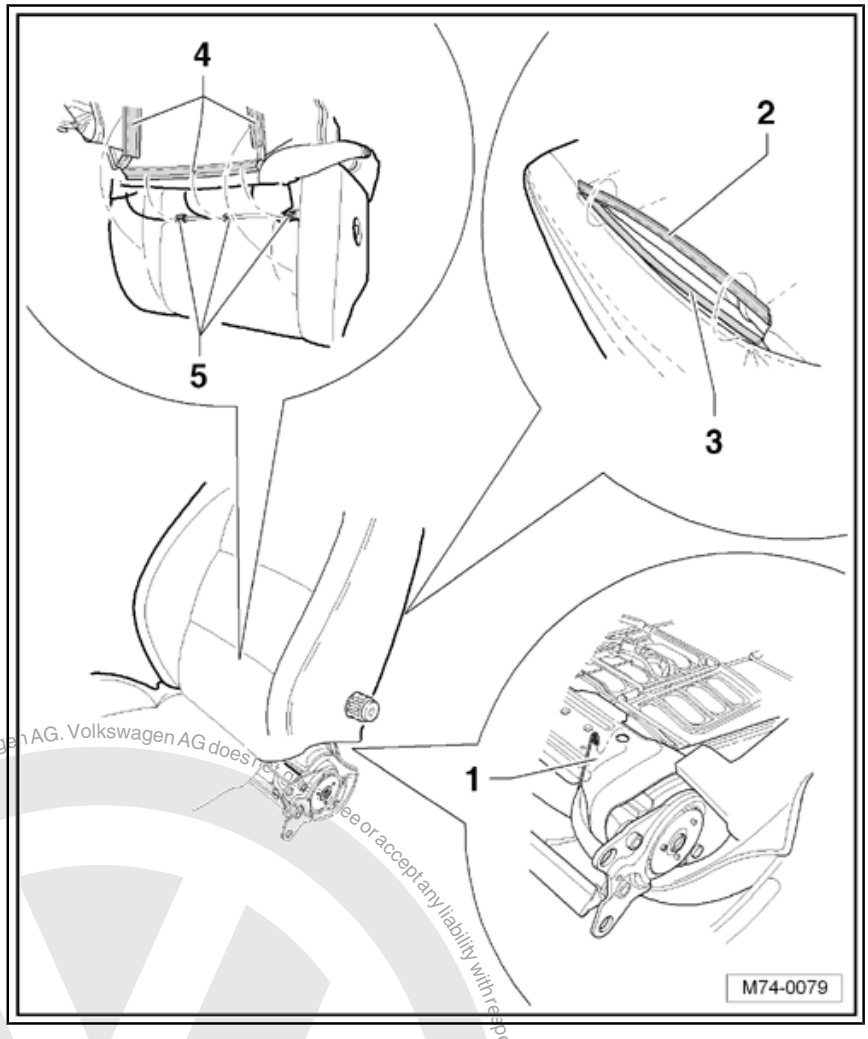

– Fold cover further upwards.

– Unclip cover profile from mountings in padding.

Note

For clarity the backrest cover is shown partially removed in the illustration.

– Cut through padding clips -1-. Padding clips must be renewed when installing.

– Unhook tensioning wire -2- from padding wire -3- on both sides.

– Remove cover and padding -4- from backrest frame -5-.

Protected by copyright. Copying for private or commercial purposes, in part or in whole, is not permitted unless authorised by Volkswagen AG. Volkswagen AG does not guarantee or accept any liability with respect to the correctness of information in this document. Copyright by Volkswagen AG.

Downloaded from www.Manualslib.com manuals search engine

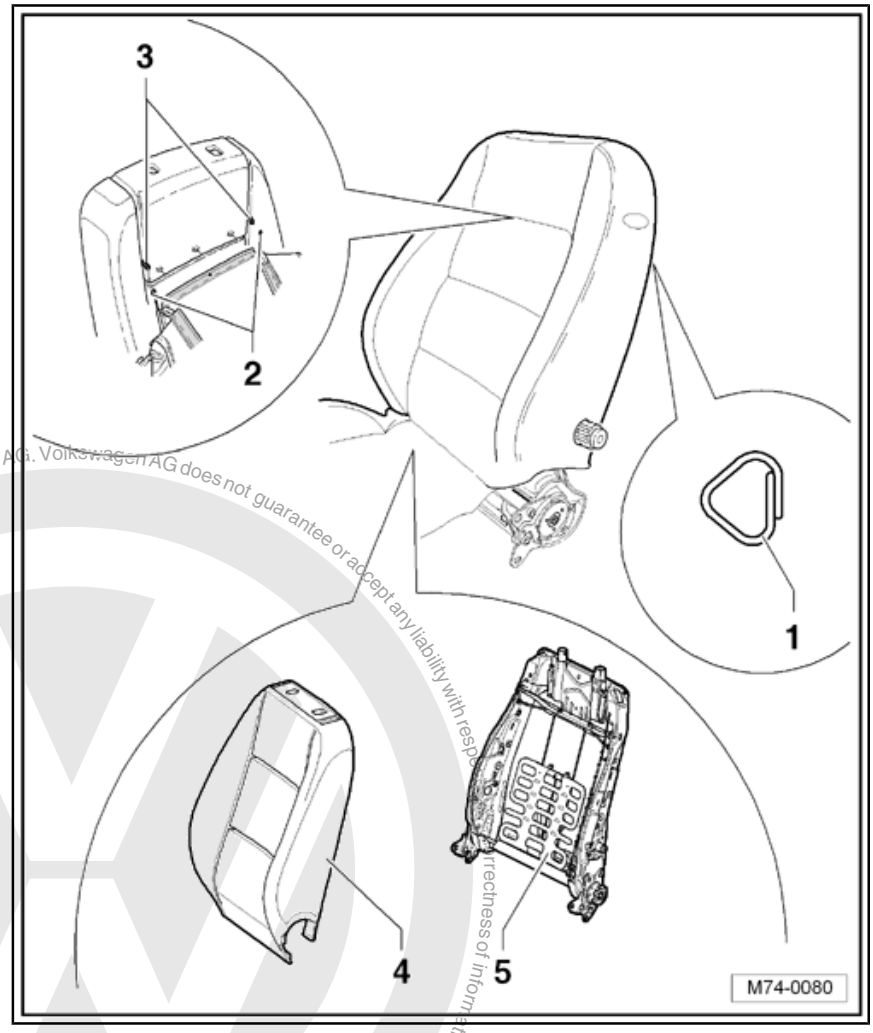

Protected by copyright. Copying for private or commercial purposes, in part or in whole, is not permitted unless authorised by Volkswagen AG. Volkswagen AG does not guarantee or accept any liability with respect to the correctness of information in this document. Copyright by Volkswagen AG.

1.3.2 Installing

– Install in reverse order of removal.

Upholstery clip pliers -V.A.G 1634- are required when installing new padding clips.

Downloaded from www.Manualslib.com manuals search engine

2 Rear seat covers and padding

2.1 Tools

Special tools and workshop equipment required

- Upholstery clip pliers -V.A.G 1634-

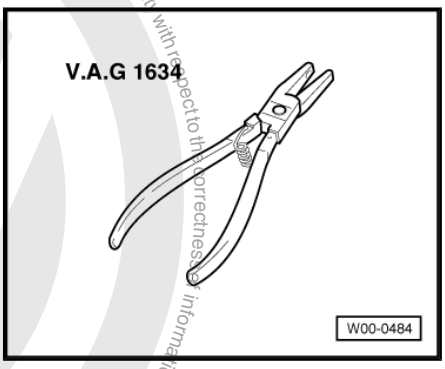

- Release lever -T10039-

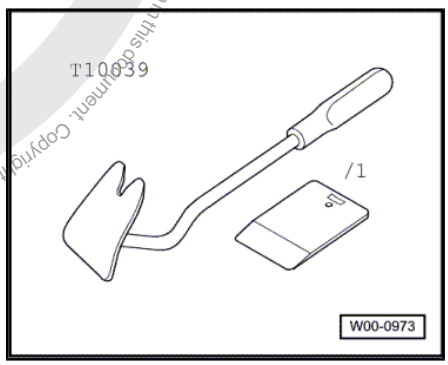

2.2 Removing and installing bench seat cover and padding (saloon)

2.2.1 Removing

– Remove bench seat ⇒ page 284 .

– Unhook all cover profiles -arrows- from seat frame on underside of bench seat.

– Release Velcro strips -1- in area of belt buckles.

Downloaded from www.Manualslib.com manuals search engine

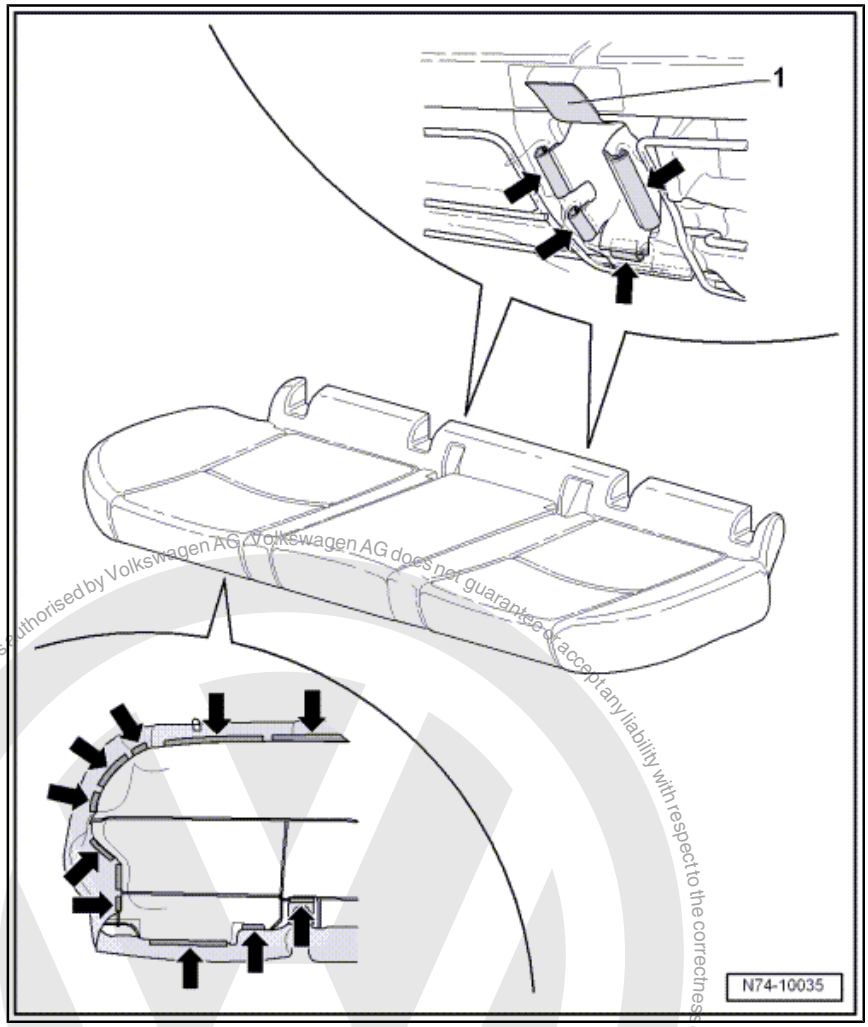

Protected by copyright. Copying for private or commercial purposes, in part or in whole, is not permitted unless authorised by Volkswagen AG. Volkswagen AG does not guarantee or accept any liability with respect to the correctness of information in this document. Copyright by Volkswagen AG.

- Roll up cover on sides.
- Using a small screwdriver, lever side webs out of fasteners -1- and pull out clamping strips -2-.
- Detach cover -3- and padding -4- from seat frame -5-.

Downloaded from www.Manualslib.com manuals search engine

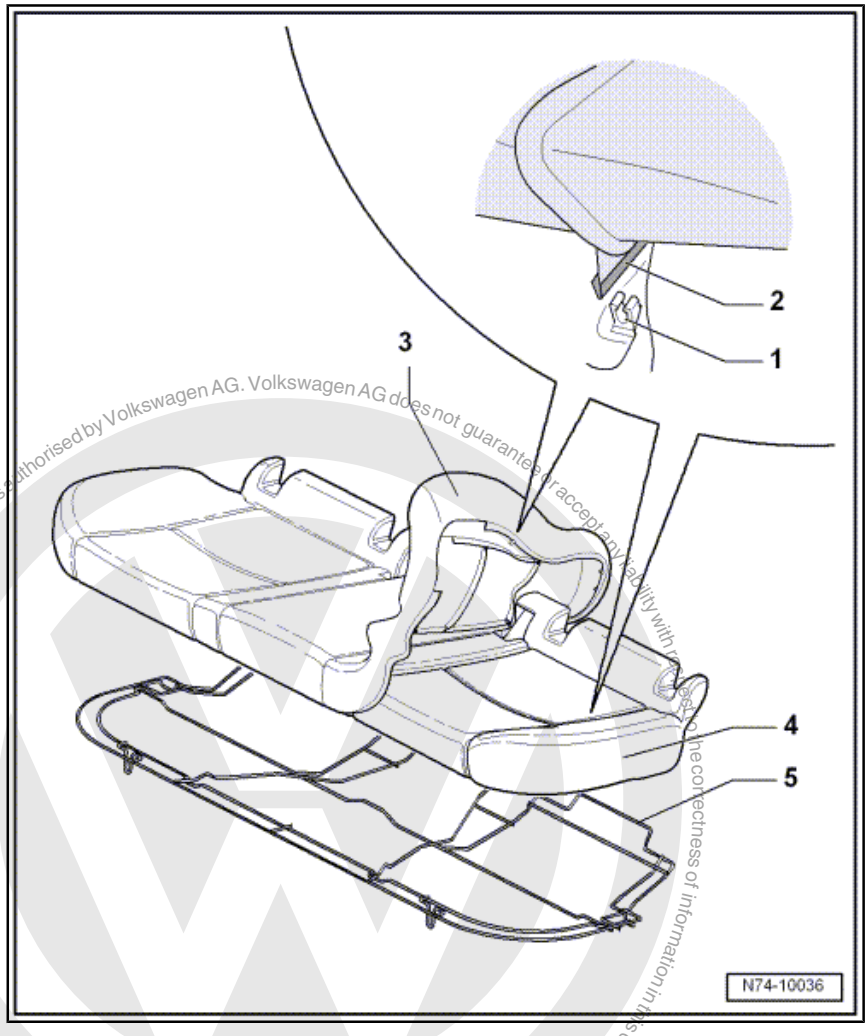

Copyright by Volkswagen AG. Volkswagen AG does not guarantee or accept any liability with respect to the correctness of information in this document. Copyright by Volkswagen AG. Copying for private or commercial purposes, in part or in whole, is not permitted unless authorised by Volkswagen AG.

2.2.2 Installing

– Install in reverse order of removal.

2.3 Removing and installing bench seat cover and padding (Variant)

2.3.1 Removing

Note

The Trendline equipment version is described and shown in the following illustrations. The procedure is described for the right bench seat. Apply the same procedures for the left side and other equipment versions as appropriate.

– Remove bench seat ⇒ page 284 .

– Unhook profiles -3- from cover -2-, in direction of -arrow-, all-round on underside of seat frame -1-.

Downloaded from www.Manualslib.com manuals search engine

– Cut through all padding clips -arrows- all-round underside of bench seat using suitable cutting pliers.

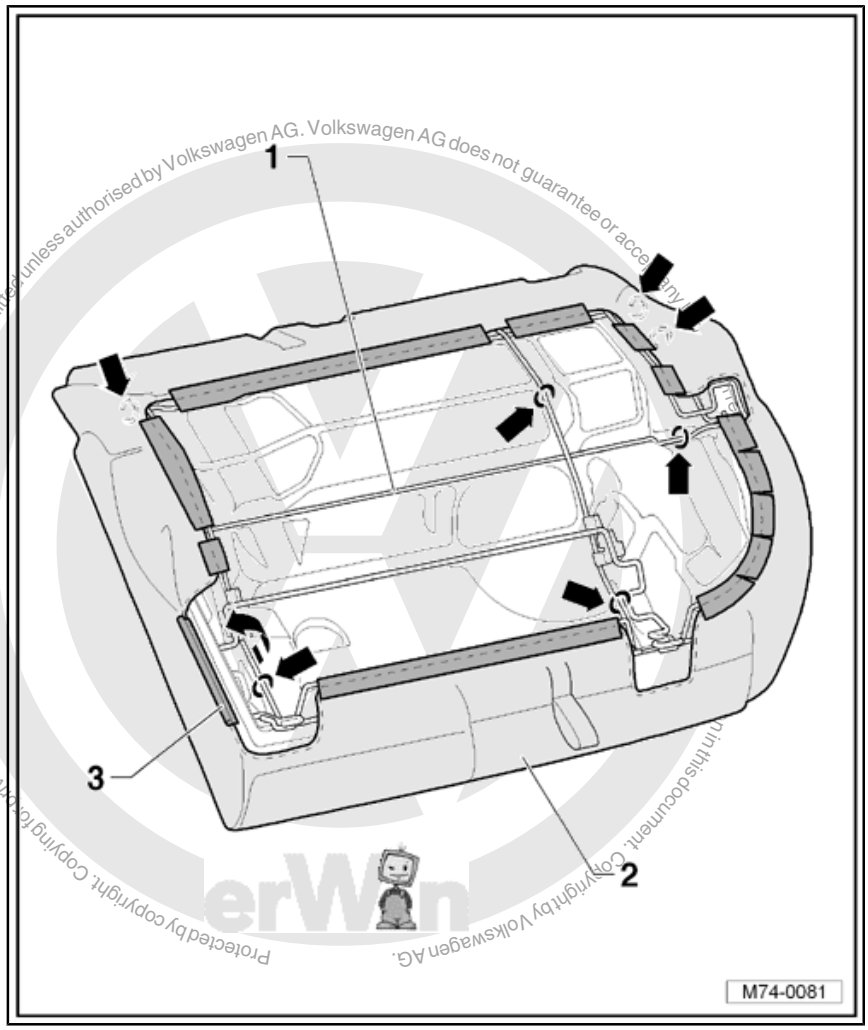

Protected by copyright. Copyright by Volkswagen AG.
Copyright by Volkswagen AG. Volkswagen AG does not guarantee or accept any liability with respect to the correctness of information in this document. Copying for private or commercial purposes, in part or in whole, is not permitted unless authorised by Volkswagen AG.

– Roll up cover -4- at sides.

– Cut through padding clips -5- using suitable cutting pliers and pull cover -4- from padding -3-.

– Then take padding -4- and cover -2- off seat frame -1-.

Downloaded from www.Manualslib.com manuals search engine

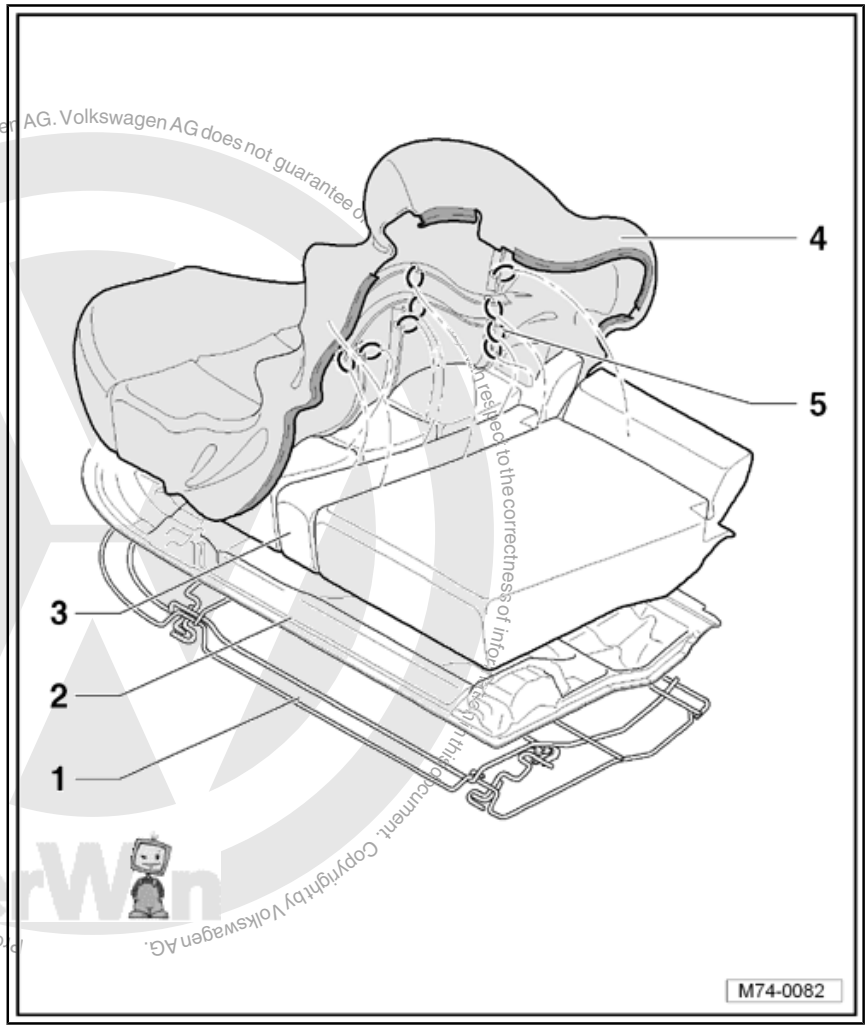

Protected by copyright. Copying for private or commercial purposes, in part or in whole, is not permitted unless authorised by Volkswagen AG. Volkswagen AG does not guarantee or accept any liability with respect to the correctness of information in this document. Copyright by Volkswagen AG.

2.3.2 Installing

– Install in reverse order of removal.

Upholstery clip pliers -V.A.G. 1634- are required when installing new padding clips.

2.4 Removing and installing backrest cover and padding (saloon)

Note

Removal and installation is described for components of right backrest. Removal and installation of components of left backrest is similar.

2.4.1 Removing

Vehicles with through-loading unit

– Remove through-loading unit with centre armrest ⇒ page 308 .

Downloaded from www.Manualslib.com manuals search engine

All vehicles

– Remove bench seat ⇒ page 284 .
– Remove backrest ⇒ page 285 .
– Lock backrest release using lock -1-, if part of original equipment.
– Operate respective button in head restraint guide and pull head restraint -2- out of backrest.

Note

Use a screwdriver to release button on right head restraint guide.

– Operate side locking devices -arrows- and release seat belt trim -3- from mountings.

Note

Seat belt trim -3- has a once-only locking device and must therefore be renewed when installing.

– Press side locking devices inwards and pull cover -4- out of backrest.

Protected by copyright. Copying for private or commercial purposes, in part or in whole, is not permitted unless authorised by Volkswagen AG. Volkswagen AG does not guarantee or accept any liability with respect to the correctness of information in this document. Copyright by Volkswagen AG.

Downloaded from www.Manualslib.com manuals search engine

– Using a screwdriver, lever all profiles -5- out of mountings -6- all-round back of backrest.

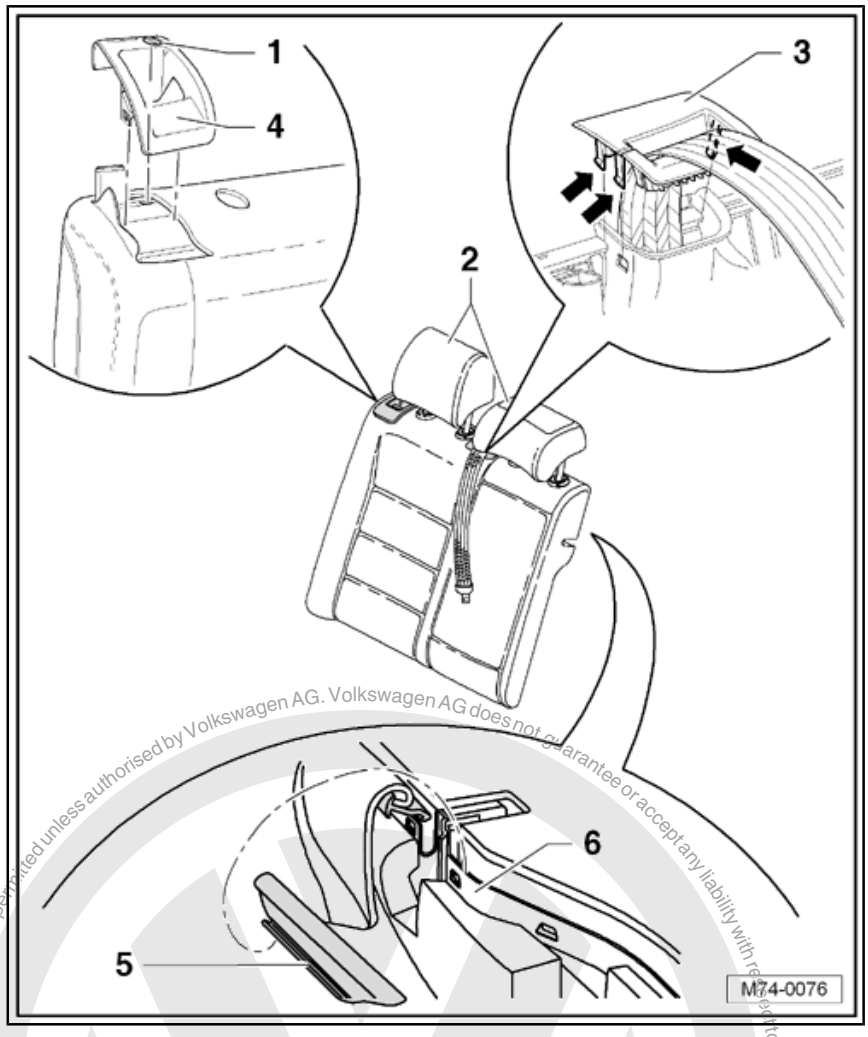

– Roll up cover on sides.

Note

Carefully lever cover -3- over head restraint guides, take care not to damage cover.

– Using a small screwdriver, lever side webs out of fasteners -1- and pull out clamping strips -2-.

– Detach cover -3- and padding -4- from seat frame -5-.

Protected by copyright. Copying for private and commercial purposes, in part or in whole, is not permitted unless authorised by Volkswagen AG. Volkswagen AG does not guarantee or accept any liability with respect to the correctness of information in this document. Copyright by Volkswagen AG.

Downloaded from www.Manualslib.com manuals search engine

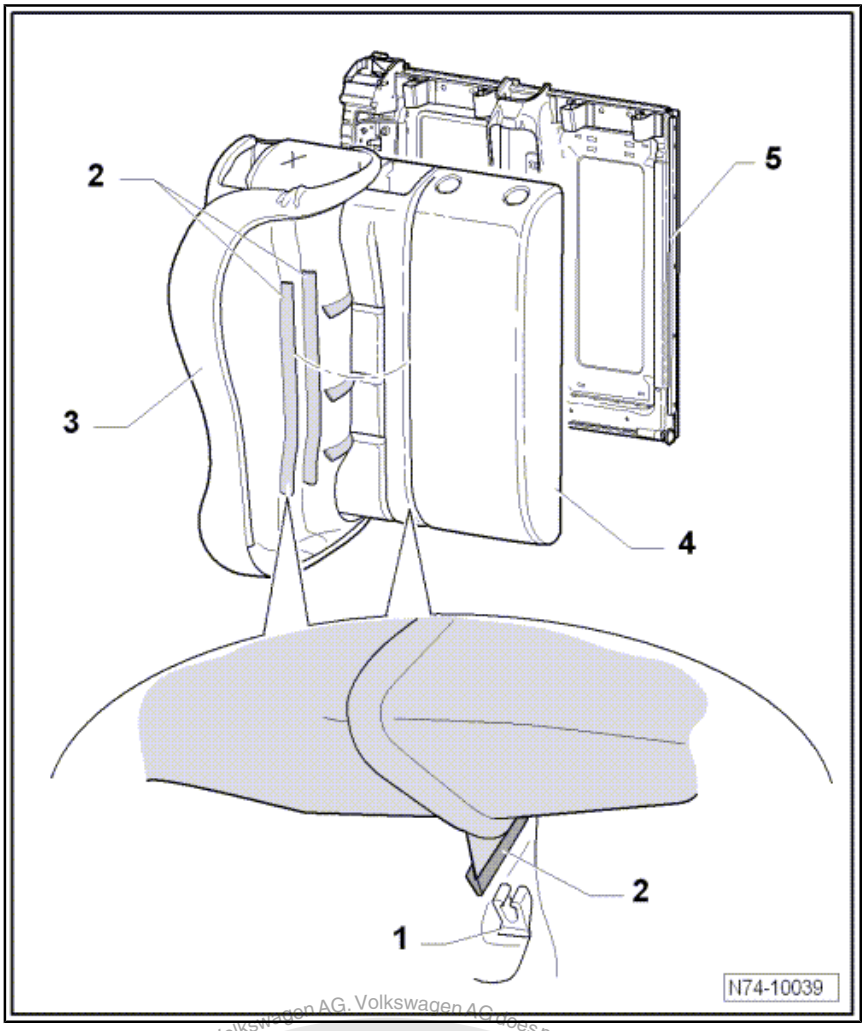

2.4.2 Installing

– Install in reverse order of removal.

2.5 Removing and installing backrest cover and padding (Variant)

Note

Removal and installation is described for components of right backrest. Removal and installation of components of left backrest is similar.

2.5.1 Removing

Vehicles with through-loading unit

– Remove through-loading unit with centre armrest ⇒ page 308 .

All vehicles

– Fold bench seat forwards.

– Remove backrest ⇒ page 285 .

Protected by copyright. Copying for private or commercial purposes, in part or in whole, is not permitted unless authorised by Volkswagen AG. Volkswagen AG does not guarantee or accept any liability with respect to the correctness of information in this document. Copyright by Volkswagen AG.

Downloaded from www.Manualslib.com manuals search engine

– Operate respective button in head restraint guide and pull head restraint -2- out of backrest.

– Operate side locking devices -arrows- and release seat belt trim -1- from mountings.

Note

Seat belt trim -1- has a once-only locking device and must therefore be renewed when installing.

– Lift side catches -6- and -8- using a screwdriver and pull cover -7- out of backrest.

– Pull bearing bush -5- out of backrest.

– Using a screwdriver, lever all profiles -4- out of mountings -3- all-round back of backrest.

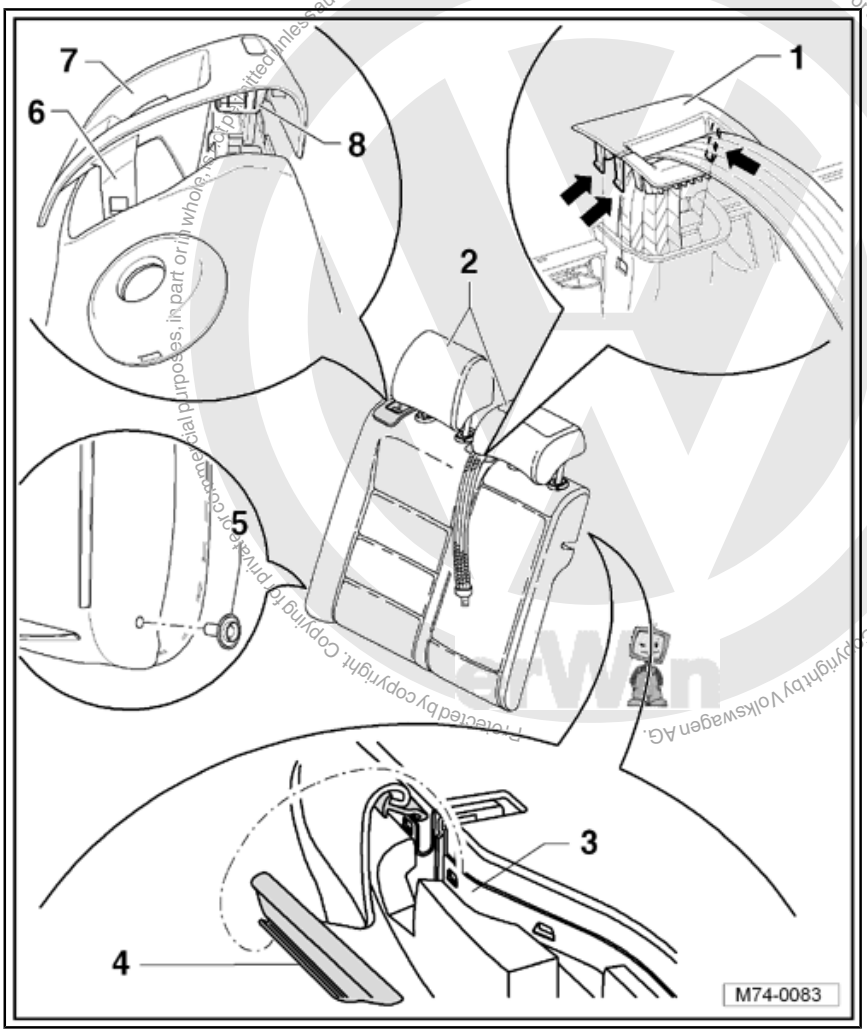

Protected by copyright. Copying for private or commercial purposes, in part or in whole, is not permitted unless authorised by Volkswagen AG. Volkswagen AG does not guarantee or accept any liability with respect to the correctness of information in this document. Copyright by Volkswagen AG.

Downloaded from www.Manualslib.com manuals search engine

Vehicles with through-loading unit

– Lever through-loading frame -1- out of mountings in back of backrest using release lever -T10039- .

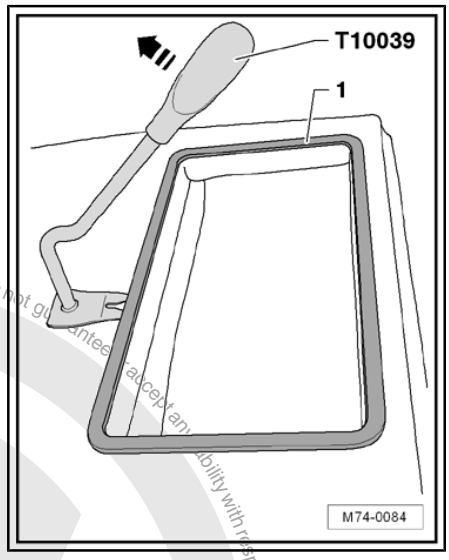

– Roll up cover on sides.

Note

Carefully lever cover -3- over head restraint guides, take care not to damage cover.

– Using a small screwdriver, lever side webs out of fasteners -1- and pull out clamping strips -2-.

Cut through padding clips -6-.

– Detach cover -3- and padding -4- from seat frame -5-.

Protected by copyright. Copying for private or commercial purposes, in part or in whole, is not permitted unless authorised by Volkswagen AG. Volkswagen AG does not guarantee or accept any liability with respect to the correctness of information in this document. Copyright by Volkswagen AG.

Downloaded from www.Manualslib.com manuals search engine

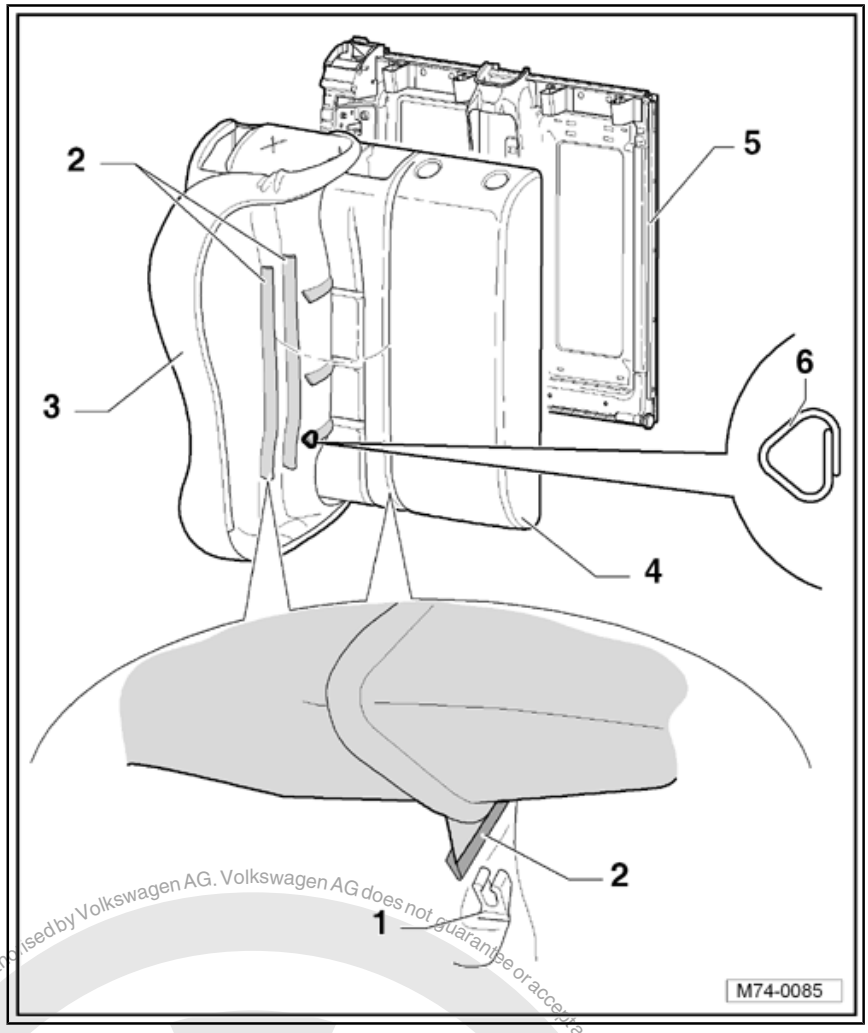

2.5.2 Installing

– Install in reverse order of removal.

Upholstery clip pliers -V.A.G. 1634- are required when installing new padding clips.

2.6 Removing and installing through-loading unit with centre armrest

2.6.1 Removing

– Unclip padded piece -1- from under centre armrest.

Protected by copyright. Copying for private or commercial purposes, in part, or in toto is not permitted unless authorised by Volkswagen AG. Volkswagen AG does not guarantee or accept any liability with respect to the correctness of information in this document. Copyright by Volkswagen AG.

Downloaded from www.Manualslib.com manuals search engine

– Open through-loading unit -2- and remove the two bolts -3- (9 Nm).

Protected by copyright. Copyright by Volkswagen AG. Copying for private or commercial purposes, in part or in whole, is not permitted unless authorised by Volkswagen AG. Volkswagen AG does not guarantee or accept any liability with respect to the correctness of information in this document.

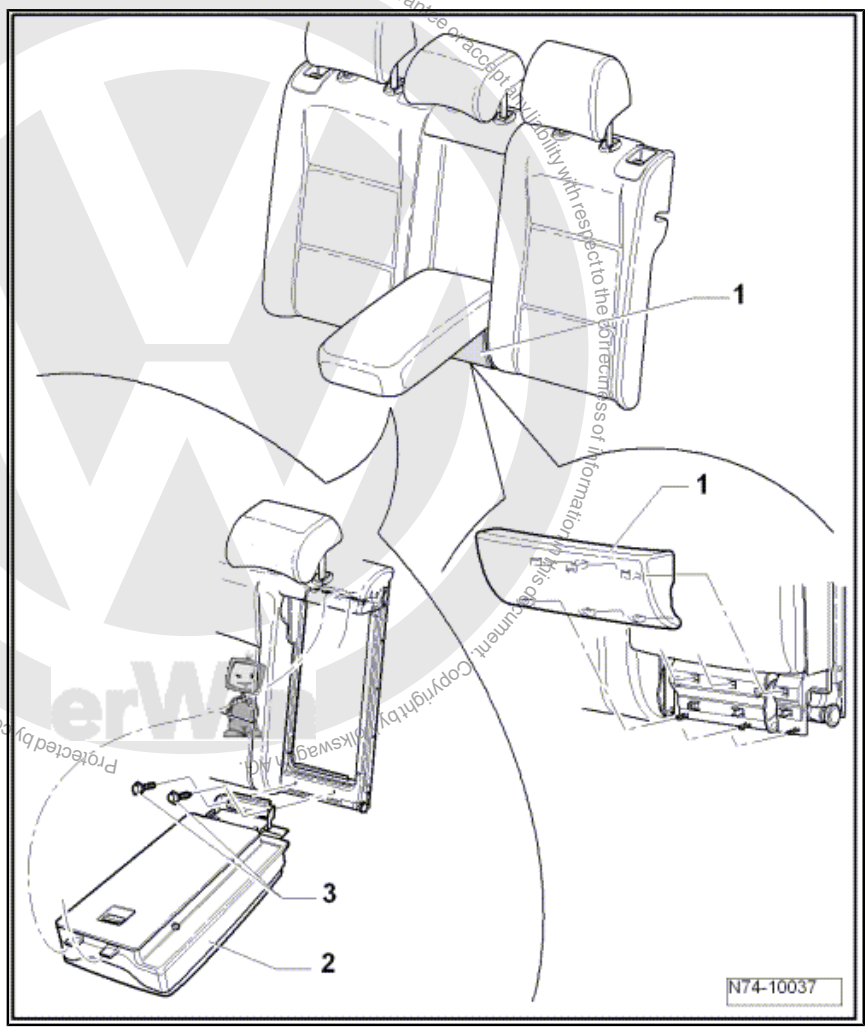

2.6.2 Installing

– Install in reverse order of removal.

2.7 Adjusting through-loading unit with centre armrest

– Clipsen Sie die Polstereinlage -1- unterhalb der Mittelarmlehne heraus und lösen Sie die Schrauben -2-

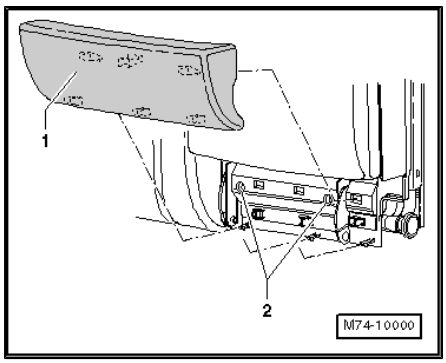

Note

Es ist nicht notwendig die Schrauben -2- herauszudrehen.

Downloaded from www.Manualslib.com manuals search engine

– Öffnen Sie die Mittelarmlehne -3- .

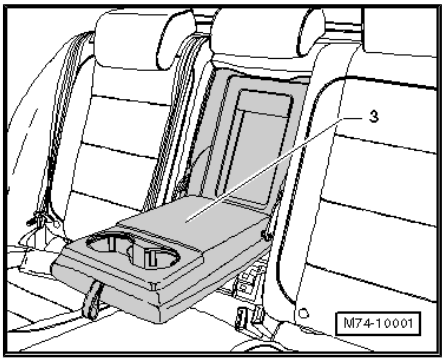

– Öffnen und Schließen Sie mit Druck zwei mal die Durchladeeinheit -4-.

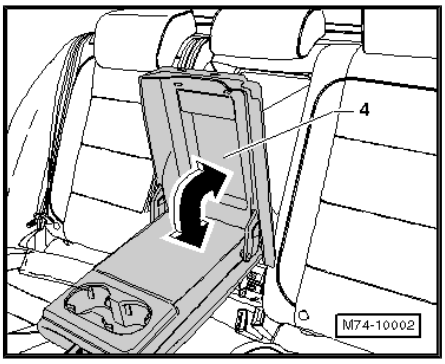

– Schließen Sie die Mittelarmlehne.

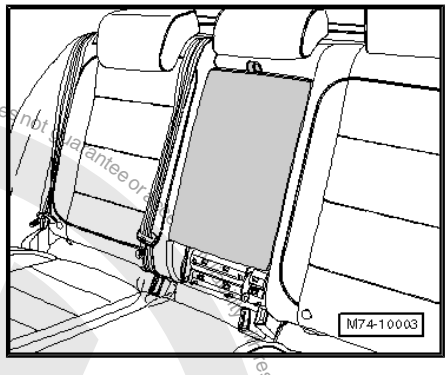

– Ziehen Sie die Schrauben -2- fest.
– Clipsen Sie die Polstereinlage -1-.

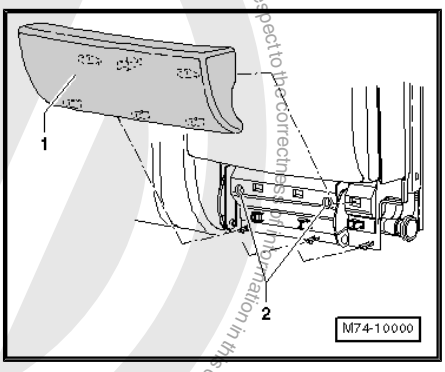

Protected by copyright. Copying for private or commercial purposes, in part or in whole, is not permitted unless authorised by Volkswagen AG. Volkswagen AG does not guarantee or assume any liability with respect to the correctness of information in this document. Copyright by Volkswagen AG.

Downloaded from www.Manualslib.com manuals search engine

2.8 Removing and installing centre armrest

2.8.1 Removing

– Fold open centre armrest -1- to $^{2}/_{3}$ position.
– Remove cover -2-.
– Remove bolts -3- (12 Nm).
– Remove centre armrest -1- from through-loading unit -4-.

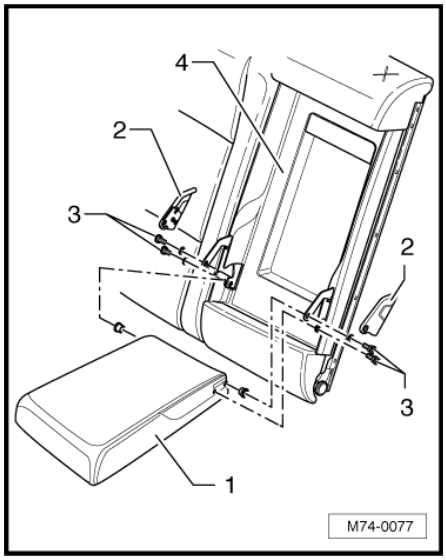

2.8.2 Installing

Install in reverse order of removal.

Protected by copyright. Copying for private or commercial purposes, in part or in whole, is not permitted unless authorised by Volkswagen AG. Volkswagen AG does not guarantee or accept any liability with respect to the correctness of information in this document. Copyright by Volkswagen AG.

Downloaded from www.Manualslib.com manuals search engine